*

CONDUCTIVE INK PRINTER

Group 7 Authors:

Ethan Baker Computer Engineering	Andrew Eppich Computer Engineering	Jeremy Jiang Computer Engineering	Giancarlo Luna Electrical Engineering

Review Committee:

Dr. Avra Kundu	ECE	Lab Manager
Dr. Nazanin Rahnavard	ECE	Professor
Michael Haas	Tensentric	Vice President of Engineering

Advisors:

Dr. Arthurs Weeks	ECE	Senior Lecturer/**Sponsor**
Dr. Chung Yong Chan	ECE	Senior Lecturer

Table of Contents

Chapter 1 – Project Introduction 9
Chapter 2 – Project Description 9
2.1 Motivation and Background 9
2.2 Existing Product, Past Projects and Related Work 9
2.2.1 Prior Previous Work 9
2.2.2 Existing and Related Products 10
2.3 Goals and Objectives 12
2.3.1 Project Goals 12
2.3.2 Project Objectives 13
2.4 Description of Features and Functionalities 15
2.5 Engineering Specifications 16
2.6 House of Quality 18
2.7 Prototype Illustration 19
2.8 Hardware Flowchart 20
2.9 Software Flowchart 21
Chapter 3 – Research and Investigation 22
3.1 Ink Material 22
3.1.1 Conductive Ink 22
3.1.2 Insulator Ink 23
3.2 Mainboard MCU 24
3.2.1 Microcontroller Family ..... **Error! Bookmark not defined.**
3.2.2 Microcontroller Selection ..... **Error! Bookmark not defined.**
3.3 Motor Systems 27
3.3.1 Motor Technologies 27
3.3.2 Stepper Motor Configuration 27
3.4 Stepper Motor Drivers 27
3.4.1 Stepper Motor Driver Technologies 27
3.4.2 Stepper Motor Drivers 29
3.5 Movement System 31
3.5.1 Sidewinder 31
3.5.2 Core XY 31
3.5.3 Gantry-Only System 32
3.5.4 Movement System Comparison and Selection 32

3.6 Hotplate 32
3.6.1 Bed Heating Technologies 32
3.6.2 Bed Heater Components 35
3.7 Head Mounting System 36
3.7.1 Mounting Mechanism Technologies 36
3.7.2 Electrical Connection Technology Comparison 38
3.8 Ink Dispensing System 41
3.8.1 Dispensing Pressure Technologies 41
3.8.2 Pressure Control System Part 43
3.9 Nozzle 46
3.9.1 Nozzle Technologies 46
3.9.2 Nozzle Products 48
3.10 Camera Selection 50
3.10.1 Photography Overview 50
3.10.2 Camera Technologies 51
3.10.3 Microscope Camera Part Selection 54
3.11 Single Board Computer Selection 62
3.11.1 Single-Board Computer Technology Selection 62
3.11.2 Raspberry Pi Part Selection 64
3.11 Storage Devices 66
3.11.1 SD Card 66
3.11.2 MicroSD Card 66
3.11.3 USB Flash Drive 67
3.11.4 Internal Flash 67
3.11.5 eMMC Module 67
3.11.6 Memory Storage Comparison and Selection 67
3.12 Z-Height sensor 69
3.12.1 TOF Sensor 69
3.12.2 Limit Switch 70
3.12.3 Inductive sensor 70
3.12.4 Capacitive Sensor 70
3.12.5 Infrared Sensor 71
3.12.6 Ultrasonic Sensor 71
3.12.7 Z-Height Sensor Comparison and Selection 72

3.13 Touchscreen Technologies and Parts 73
3.13.1 Touchscreen Technologies 73
Resistive 74
Capacitive 74
Surface 74
3.13.2 Touchscreen Selections 75
3.14 Power Supply 77
3.14.1 Overall power draw 78
3.14.2 AC to DC Power Supply Comparison 79
3.15 Voltage Regulator Selections 83
3.15.1 Voltage Regulator Technology Comparison 83
3.15.2 Voltage Regulator Part Comparison 84
3.16 Communication Protocols 85
3.16.1 I2C 85
3.16.2 SPI 85
3.16.3 UART 85
3.16.4 Communication Protocol Comparison 85
3.17 Slicer Software 87
3.17.1 Slicer Technology Comparison 87
3.17.2 Three Custom Slicer Design Parts 88
3.17.3 Gerber Parser Library Selection 89
3.17.4 G-Code Generation Libraries 90
3.17.5 GUI Libraries 91
3.17.6 Slicer Language Selection 93
3.18 Embedded/Firmware 93
3.18.1 Marlin Firmware 93
3.18.2 Klipper 93
3.18.3 Custom Firmware 94
3.18.4 Comparison and Selection 94
3.19 Camera Vision 95
3.19.1 Computer Vision Platform Selection 95
3.19.2 Computer Vision Framework Selection 96
3.19.3 Computer Vision Algorithm Selection 100
3.20 Embedded Programming Language Selection 101

3.21 Programming Integrated Development Environment (IDE) 102
3.21.1 Arduino IDE 102
3.21.2 Visual Studio Code 102
3.21.3 Eclipse 102
3.21.4 PyCharm 103
3.21.5 Programming IDE Comparison and Selection 103
Chapter 4 – Standards and Constraints 104
4.1 Standards 104
4.1.1 Hardware Standards 104
4.1.1 Communication Standards 106
4.1.2 Software File Standards 110
4.2 Constraints 115
4.2.1 Environmental Constraints 115
4.2.2 Economic Constraints 115
4.2.3 Time Constraints 116
4.2.3 Equipment Constraints 117
4.2.4 Safety Constraints 117
4.2.5 Manufacturability Constraints 117
4.2.6 Ethical Connstraints 117
4.2.7 Sustainability Constraints 117
Chapter 5 – Application of AI/LLMs 117
Pros of AI/LLM Use: 118
Cons of AI/LLM Use: 118
5.1 Case Study 1 118
5.2 Case Study 2 118
5.3 Case Study 3 119
5.4 Case Study 4 120
5.5 Case Study 5 120
5.6 Case Study 6 121
5.7 Case Study 7 121
Chapter 6 – Hardware Design 122
6.1 MCU sheet 122
6.2 Peripherals sheet 124
6.3 Motor Driver Sheet 125

6.9 UART-USB Conversion 126
6.10 Voltage Regulator Circuit 127
6.x (final point) PSU 127
Chapter 7 – Software Design 128
7.1 Software Structure Overview 128
7.1.1 Use Case Diagram 128
7.1 Slicer Software 129
7.1.1 Slicer File Structure 129
7.1.2 GUI Input 130
7.1.3 Parsing File and Converting to G-Code 131
7.2 Firmware Software 131
7.3 Vision Software 132
7.3.1 Capturing and Creating a Composite Image 132
7.3.2 Image Preparation 135
7.3.3 Detection of Open and Short Circuits 136
Chapter 8 – PCB Layout 139
8.1 Mainboard Layout 139
8.2 Voltage Regulator Layout 139
8.3 Motor Driver Layout 139
Chapter 9 – System Testing and Evaluation 139
Chapter 10 – Administrative Content 139
10.1 Budget and Financing 139
10.2 Milestones and Distributions 140
Appendices 142
Appendix A – Works Cited 142
Appendix B – Copyright Permissions 167
Appendix C – Data Sheets 167
Appendix D – Software Code 168
Appendix E – AI Prompts and Outcomes 168
Minimum Requirements for 3D Printer Control 168
Modifying Marlin 2.0 Firmware 171
Describing Different Stepper Motor Drivers 178
I am trying to modify an ender 3 bed to heat to 170C 180
Fill Out Columns of Motor Driver Comparison 185

Conductive Ink To Use 186
PCB General Camera Options 190
PCB Specific Camera Choices 195
Appendix F – Miscellany 197

Table of Figures

Figure 1 - House of Quality 18

Figure 2 - Prototype Illustration 19

Figure 3 - Hardware Diagram Flowchart 20

Figure 4 - Software Flowchart 21

Figure 5 - Gerber Standard Permission from Ucamco 167

Figure 6 – SD card architecture and layout 168

Figure 7 - Logic Level Shifter 168

Table of Tables

Table 1 - Engineering Specifications 16

Table 2 - Component Specification 17

Table 3 - Conductive Ink Comparison 23

Table 4 - Insulator Ink Comparison 24

Table 5 - Mainboard MCU Comparison Table [8, 9, 10] 26

Table 6 - Motor Technologies Comparison Table 27

Table 7- Stepper Motor Configuration Comparison Table 27

Table 8 - Motor Driver Comparison 30

Table 9 - Movement System Comparison 32

Table 10 - Mounting Mechanism Comparison Table 38

Table 11- Electrical Connection Technologies Comparison Table 40

Table 12 - Dispensing Technology Comparison Table 43

Table 13 - Pressure Control System Comparison Table 45

Table 14 - Nozzle Types Comparison Table 47

Table 15 - Nozzle Products Comparison Table 49

Table 16 - Ink Reservoir and Delivery System Comparison Table**Error! Bookmark not defined.**

Table 17 - Camera Comparison and Selection 53

Table 18 - Microscope Camera Comparison Table 1 59

Table 19 - Microscope Camera Comparison Table 2 60

Table 20 - Single-Board Computer Technology Comparison Table 63

Table 21 - Raspberry Pi Part Comparison Table 65

Table 22 - Linear Switch Comparison 72

Table 23 - Touchscreen technology comparison 74

Table 24 - Touchscreen Comparison 77

Table 25 - IO Expander Comparison [36] [37] [38] .....**Error! Bookmark not defined.**

Table 26 - Power Usage Table 78

Table 27- Power Supplies Comparison Table 81

Table 28 - Communication Feature Set Table 85

Table 29 - Communications Pro's/Con's Table 85

Table 30 - Slicer Comparison and Selection 88

Table 31 - Slicer Library Comparison 89

Table 32 - G-Code Generation Library Comparison 91

Table 33 - Slicer GUI Library Comparison 92

Table 34 - Firmware Comparison 94

Table 35 - Computer Vision Platform Comparison Table 95

Table 36 - Computer Vision Library Selection 98

Table 37 - Computer Vision Algorithim Comparison 101

Table 38 - I^2C Properties 107

Table 39 - SPI Properties 108

Table 40 – UART Properties 108

Table 41 - USB Properties 109

Table 42 - CAN Properties 110

Table 43 - Gerber Command Examples – Reproduced with permission from Ucamco 111

Table 44 - Example Gerber File – Reproduced with Permission from Ucamco 111

Table 45 - Gerber Attribute Types – Reproduced with Permission from Ucamco 113

Table 46 - Estimated Budget 139

Table 47 - Bill Of Materials 140

Table 48 - Project Milestones 140

Table 49 - Work Distribution 141

Chapter 1 – Project Introduction

Chapter 2 – Project Description

2.1 Motivation and Background

Conductive ink and other additive technologies are relatively new methods of creating circuits. Traditionally, Printed Circuit Boards (PCBs) have been complex to design, requiring multiple stages to make a functional board. The simplest boards that most hobbyists can make are nothing more than milled copper using a traditional CNC machine. By using conductive ink, it is possible to make circuits in an additive method. Beyond creating PCBs on rigid surfaces, it allows for new inventive uses such as the uses that have been observed in the RF industry which allow for creating receivers on curved surfaces. Conductive ink also expands the possibilities of what materials can be used in PCB design, allowing for flexible PCBs or ones made for biosensors. Even the simplest uses of conductive ink expand the possibilities for the average individual to get involved in circuit design through conductive ink pens which can be used to literally draw circuits on paper.

The Conductive Ink Printer (C.I.P) is a project for UCF's ECE department senior design course over Spring 2026 – Summer 2026. The C.I.P is an additive manufacturing device sponsored by Dr. Arthur Weeks to add rapid PCB prototyping using conductive ink to UCF's manufacturing capabilities. By dispensing and then curing conductive ink on an appropriate substrate, it is possible to create both traditional rigid PCBs and also nontraditional PCBs on flexible and environmentally friendly materials. Additionally, it is possible to fix defective PCBs in a more permanent manner. Before this design, someone may need to jump a wire on the board or send a PCB back to design and manufacturing, which is often 2-week lead time at minimum. This solution will ultimately save time and money spent on production and shipping over boards that are made ‘out-of-house'.

The overall goal of this project is to allow UCF ECE department students the ability to design and test circuits more rapidly and with non-traditional technologies, expanding what is possible for their projects. The base of the project will consist of a stripped Creality Ender 3 printer, and the electrical and software components will be completely redesigned to implement a modular printing head system. The goal of this system is to allow for printing heads that perform different functions to be swapped out. So not only can there be a conductive ink head that performs printing of traces on the PCB, but also an insulator ink head that would allow for traces to cross over each other, enabling enable more complex circuits.

2.2 Existing Product, Past Projects and Related Work

2.2.1 Prior Previous Work

Solder Paste Dispenser

The Solder Paste Dispenser (SPD) [1] is a previous Department of ECE senior design project by group 4 of fall 2024/spring 2025. The goal of the SPD was to take a modified

Ender 3 printer and allow it to automate solder paste dispensing on a PCB when given the Gerber files. The paste would be dispensed via a pneumatic pump that would push the paste out. The SPD would manage quality control through a stereolithography system which could detect PCB placement as well as determining the height of paste mounds. The basic goal of the system was to achieve SMD sizes of 0603(imperial)/1608(metric), 0402(imperial)/1005(metric) as an advanced goal, and 0201(imperial)/0603(metric) as a stretch goal. The SPD replaced all the pre-existing circuitry with a custom motherboard and custom motor drivers. The SPD utilized a Raspberry Pi 4 to host a webserver for uploading Gerber files, as well as managing the stereoscopy. It also uses an ESP32-WROOM-32D to control the motor drivers and pneumatic pump, interface with limit switches and touchscreen, and to connect wirelessly to the Raspberry Pi. The SPD lacked the ability to cure the solder paste and required the use of an external reflow oven to finish the process. This provided a good time saving method for people who had multiple boards to manufacture or lacked a stencil but required the use of a second device to finish the process and could not place components independently.

Our project serves to act as almost a preliminary machine to the SPD through its ability to make the circuit boards that the SPD could finish with solder paste. Our stretch goal of the project is to eliminate the need for the SPD entirely by adding a feature to also extrude solder paste so the PCB can be designed all on one machine. This would create a one stop shop for single sideboard manufacturing and give the ability to solder paste existing circuit boards.

2.2.2 Existing and Related Products

Voltera V-One

The Voltera V-One [2] is a pre-existing 4 in 1 PCB design platform. The V-One is capable of dispensing silver ink, dispensing solder paste, milling with a drill head, and curing with a reflow heat bed. The Voltera V-One represents an ideal end goal for our project with its manufacturing prowess. It can use silver ink to make PCBs without milling, or it can mill copper boards to design more traditional PCBs. Once the silver ink is set, it can be cured using the built-in reflow hotplate. The V-One is also capable of milling to design two-layer PCBs using rivets to connect their layers. Finally, it can place solder paste to finish the board. Once all components are placed by hand, the V-One can act as a reflow hotplate to cure the solder paste. The V-One is currently listed at $3500 with shipping for the base option and $4200 when adding the milling head. While the V-One provides extensive manufacturing options when making a PCB, its cost keeps it out of the hands of most individuals without significant financial investment.

The high cost of this device has inspired our project to make a device that takes the additive manufacturing capabilities of the V-One and reduces the cost by removing other capabilities. This compromise improves the cost of the device and while it removes the subtractive manufacturing capabilities it preserves what makes the V-One unique in comparison to other desktop CNC (computer numerically controlled) devices.

Voltera NOVA

The Voltera NOVA [3] is another manufacturing device produced by Voltera that is designed for manufacturing that is more like screen printing. The NOVA is more focused on designing circuits on flexible materials. It can design one-sided circuits which are ideal for non-traditional boards or wearable electronics. The NOVA uses an insulator ink to allow for crossovers but is incapable of allowing for component placement on both sides of the board. Like the V-One, the NOVA uses EFD 5cc syringe barrels sold by Voltera but also allows for more freedom in material choice by sourcing materials from suppliers. The NOVA does not list a price but instead gives the option to request a quote from Voltera; however, the price of the smart dispenser and smart probe heads are $1599.99 and $1199.99 respectively, which is also prohibitive to many. The NOVA does not have a hotplate or any built-in curing method for materials which provides the need for another device for completing any circuit built by the NOVA.

Our project, while heavily inspired by the NOVA and V-One, would make up for the lack of heating ability to finish on the NOVA and would improve on the high cost of the NOVA and its attachments. The probe head would only be needed for a nonplanar base such as a flexible material. As that is a stretch goal for us, there is no initial need for such an expensive head.

Circuit Jet

The Circuit Jet by Electronic Inks [4] is a desktop PCB printer that uses inkjet technology like the NOVA to print PCBs on a variety of substrates. The printer uses cartridges similar to traditional ink cartridges, and they can be disposed of in the same way. Not too much is given on the manufacturer's site, but it can be inferred that the Circuit Jet functions in a similar manner to the NOVA and suffers the same drawbacks such as a lack of ink curing capability.

This device, simplistic in nature, keeps a low cost in comparison to the Voltera Devices but also lacks much of the potential that those devices have. As this device is inferred to have the same drawbacks as the NOVA and it appears to be a much lower cost product that can be improved by our project by adding standardization of the ink syringes to give greater material variation. We can also improve upon the Circuit Jet by adding the ability to create multiple layers.

Brother MFC-J450DW

Brother Inkjet printers (or any other type of classic inkjet printer) can be modified to print with conductive ink [5]. Inkjet printers typically use piezoelectric or heat-based deposition methods. When a current is passed through, the nozzle will either heat slightly, creating a gas bubble depositing the ink, or the piezoelectric material will slightly expand pushing ink out. This option, while the least refined, is also the least expensive option. Using an inkjet printer cuts down on cost and allows rapid prototyping of circuits for under $200 depending on ink material and printer choice. However, the downsides of this method are numerous as the circuits are limited to printing only on paper. This means that traditional soldering or curing won't be a viable option as it will destroy the paper. Copper tape makes

it possible to connect printed traces to components, but tape is not mechanically solid for designing a production circuit. Using a traditional inkjet printer also means there is no way of curing the circuit, such as by UV, which means an additional machine will be needed.

Similar to the Circuit Jet, the modified Brother printer utilizes traditional ink cartridge and can therefore be improved to a variety of materials by replacing its cartridges with syringe tubes. This project will also allow for real functional PCB design rather than just printing conductive circuits on paper which will allow for real soldering and stronger connectivity between components.

Aerosol Jet 5x

The Aerosol Jet 5x designed by Optomec [6] is an advanced 5 axis additive inkjet circuit manufacturing machine. The 5x can print not just with conductive inks but with a variety of other materials. The 5x also has capabilities for UV curing and laser sintering. Using the inkjet methodology and 5-axis printing, the 5x can also print on a variety of material, which allows for both traditional hard and flexible PCBs. On the manufacturer's site there is no price listed, but the option is given to contact for a quote. The only main drawback besides the assumably exorbitant price is the lack of drilling ability, so it is only possible to create circuits that can connect SMD components on one side (unless the object is pre-milled as shown in one of the example videos).

This product serves as a high scale inspiration of what we would like our project to imitate. While infeasible in the time span of senior design this project was chosen to inspire us for additive methods and to serve for future senior design students as a place for them to pick up where our project left off. It would be an ideal stretch goal for our project to be capable of 5 axis additive manufacturing as it would greatly expand the options of how we can manufacture PCBs.

2.3 Goals and Objectives

2.3.1 Project Goals

The main goal of this project was to build a conductive ink printer to create PCBs by modifying an Ender 3 3D printer into a modular system. The goals are listed below:

Basic Goals:

- Modify a Creality Ender 3 to function as a conductive ink printer with 12-16 mils trace widths
- Design and implement a swappable head system to enable rapid switching between conductive ink dispensing and other potential functionalities such as insulator ink
- Develop system for automatic head detection
- Ensure proper trace isolation and spacing (minimum 12 mils) per schematic specifications
- Design and implement a user-friendly printer-side interface for printer control, parameter configuration, and PCB design selection

Advanced Goals:

- Use computer vision to validate printed traces against schematic specifications
- Enable the creation of crossover traces
- Allow the user to manually intervene in the operation of the conductive ink printer
- Incorporate a hotplate with programmable temperature control for curing and bonding conductive or insulating ink deposits

Stretch Goals:

- Create a head that performs solder pasting
- Enable part avoidance for post-hoc PCB modifications
- Design and integrate a milling head as an additional swappable tool option to enable the milling of vias for double-sided PCBs
- Develop a head for component placement
- Create a head to evenly distribute and cure a varnish to create a solder mask on the PCB while avoiding covering pads that should be exposed
- Create a web server for people to remotely request PCBs to be printed, which then can be fulfilled by an operator
- Enable printing on non-planar surfaces

2.3.2 Project Objectives

The objectives to achieve the goals are as follows:

Objectives for Basic Goals:

- Research and select appropriate conductive ink formulations compatible with dispensing systems
- Design custom mounting brackets and adapters for the swappable head mechanism
- Implement I2C or serial communication between the printer and tool heads with embedded identification chips, enabling firmware to detect head type and configure parameters accordingly
- Implement a slicer to convert a copper layer schematic into G-code
- Find what amount of pressure on the ink is necessary to obtain various desired trace widths through the nozzle
- Calibrate X/Y/Z axis movements and dispensing rates to achieve precise trace placement
- Select appropriate touchscreen hardware, develop GUI software, and integrate with printer firmware for seamless user control

Our basic goals focus on providing advanced PCB prototyping capabilities to existing, functional 3D printing platforms. Using a swappable head design, we can expand the range of fabrication modes and applications beyond standard FDM printing. Additionally, developing multi-layer deposition techniques with dielectric insulating layers would allow the creation of crossover traces, significantly expanding circuit design possibilities beyond simple single-layer circuits. The implementation of intelligent tool detection and

configuration allows the system to automatically adapt to slicer parameters based on the installed head type using unique head IDs. The firmware modifications enable seamless transitions between different fabrication processes with minimal manual reconfiguration. The integration of computer vision for automated quality inspection provides users with real-time validation of printed traces against their original schematics, ensuring accuracy and reducing material waste from failed prints.

Objectives for Advanced Goals:

- Select and integrate appropriate solder paste dispensing hardware
- Incorporate a display directly on the printer for direct interaction
- Source a hotplate with programmable temperature control for reflow profiles
- Mount camera system to print head and implement computer vision algorithms to automatically inspect and validate printed traces against the original schematic design
- Implement pause/resume functionality, emergency stop controls, and manual parameter adjustment through the printer interface to enable operator intervention during printing
- Develop multi-layer deposition techniques for creating crossover traces with insulating ink

Conductive ink printers have a wide range of applications involving various PCB designs and complexities. Due to the unique requirements of complete PCB assembly, printing conductive traces alone is insufficient for functional prototypes. Many designs require component placement and soldering to create working circuits. To address this limitation while expanding the system's capabilities, our advanced goals provide the ability to create complete PCB assemblies through integrated solder paste dispensing and reflow soldering. These features streamline the entire fabrication process from trace printing to component bonding, minimizing manual intervention between stages. For example, a multi-layer PCB prototype can be fabricated over several hours with semi-automated transitions between conductive ink deposition, solder paste application, and thermal reflow for component attachment.

Objectives for Stretch Goals:

- Research CNC milling requirements, select compatible spindle/motor, and develop tool path generation algorithms for PCB milling and via drilling operations
- Implement model upload and part identification to avoid current packages on the PCB to place new traces without collision
- Implement surface scanning or mapping capabilities for non-planar detection
- Develop adaptive G-code generation for curved surface printing
- Design and integrate solder paste dispensing head with pneumatic pressure control system for automated paste deposition
- Develop pick-and-place head mechanism with vacuum gripper for automated component placement
- Develop web-based interface with user authentication, job queue management, and operator dashboard for remote PCB fabrication request fulfillment

- Design solder mask dispensing system with controlled application patterns and UV curing capabilities while implementing pad masking algorithms to preserve exposed connection points

As previously mentioned, the versatility of PCB prototyping platforms requires them to accommodate various substrate materials and fabrication techniques. Traditional subtractive methods like PCB milling remain essential for certain applications, particularly when working with rigid substrates or creating isolated copper regions. Complex circuit designs often require traces to cross over one another without electrical connection, a capability typically achieved through multi-layer PCBs or insulating bridge layers. Advanced prototyping scenarios may also involve non-planar surfaces for wearable electronics or conformal applications. If the system is limited to flat, single-layer substrate printing, it cannot accommodate these specialized use cases. Our stretch goals introduce CNC milling capabilities as an additional swappable head option, enabling both additive and subtractive fabrication methods on a single platform. By implementing surface scanning and adaptive path generation, we can accommodate curved or irregular surfaces for conformal electronics applications. This expansion would transform the platform from a single-purpose conductive ink printer into a comprehensive PCB prototyping workstation capable of addressing diverse fabrication requirements that researchers and makers encounter in their projects.

2.4 Description of Features and Functionalities

As this project involves modifying an Ender 3, the features and functions that follow are designed to replace most electrical components and printer firmware as well as change the extrusion technology. The resulting system includes integrated features for operational control, design inspection, and verification.

Users begin by transferring a Gerber file of their PCB design to the slicer on their computer, which converts it to G-code for the printer. The system processes the Gerber file and translates the circuit trace patterns into precise movement instructions for the printer. Once the PCB substrate is properly positioned, users initiate the printing process through an integrated interface. The touchscreen interface provides complete control over printer operations, including print initiation, file selection, manual head positioning, and wireless transfer of schematics.

Accurate PCB positioning is achieved through an alignment fixture consisting of an L-bracket and magnets to hold the PCB in place, establishing a consistent reference origin for all printer movements. A magnetic build surface secures the PCB substrate and prevents its movement during the ink dispensing process, ensuring precise trace deposition and minimizing printing errors. Adding a rubber base to the magnets would increase the friction to prevent slippage as well as preventing the magnet bases from overheating.

The printer incorporates an integrated camera mounted to the dispenser assembly for calibration and quality inspection. The imaging system establishes the PCB origin by detecting alignment markers, such as April tags (or some similar way of detecting locations on the baseplate) on positioning brackets or board edges. This enables accurate trace

placement relative to the substrate. The camera provides magnified views of deposited traces for manual inspection of trace width, spacing, and continuity. Users can verify each layer's quality before proceeding to the next, ensuring proper alignment and identifying defects such as breaks or spacing errors early in the fabrication process.

2.5 Engineering Specifications

Table 1 - Engineering Specifications

Parameter	Value	Description
Flow rate	≥0.001 mL/min	The rate we can extrude silver ink, relates to the production rate. Limited by the control mechanism that outputs ink.
Ink laying precision*	±.3 mm	The deviation of a trace's edge from intended schematic, where the edge is the placement of one side of a trace.
Trace width	12 - 16 mil	The width that the machine is capable of performing at.
Print dimensions	x-dimension: ≥200 mm y-dimension: ≥200 mm	The dimensions on the plate the user can work on top of.
XYZ resolution	±.1 mm	The precision of the movement of the printer tip.
Syringe capacity	≥5 mL	Total capacity that the machine can hold of ink.
Substrate thickness	≤2.36 mm	The thickness of the material to print on.
Connectivity	50 – 150 Mbps	Rate of SD card read time when placed in printer.
Cost	≤$1300	The total this machine has been budgeted for in dollars.
Print speed	≥60 mm/min	The rate at which the printer can produce a trace with a width equal to the diameter of the nozzle tip.

Power consumption	≤200 W when printing; ≤1000 W when heating	Power consumption measured at wall outlet.

Table 2 - Component Specification

Component	Parameter	Value	Description
SD Card	Connectivity	50 – 150 Mbps	The goal is to create a stable connection for transmitting G-Code.
Ink	Curing Temperature*	≤175 C	The rated temperature for our 'reference ink' to cure at.
Ink	Cure Time*	≤20 minutes	The time at rated temp it takes to cure.
Display Screen	Interface Area	≥2.5 inches	The area with which the user can interface. Minimum size for comfort.
Stepper Motor	Voltage	12 V to 24 V	The voltage a motor can accept.
Single-Board Computer	RAM	≥4 GB	To reasonably store multiple high-resolution pictures of the PCB, at least 4 GB is preferable.
Camera	Magnification	≥2 pixels per mil	The camera needs magnify enough to capture trace sizes accurately. At minimum, they should be capable of capturing a trace that is one mil in width as being two pixels in width.

* - dependent on ink properties

2.6 House of Quality

Relationships	
Strong Positive	↑↑
Weak Positive	↑
Weak Negative	↓
Strong Negative	↓↓

Direction of Improvement	
Maximize	+
Minimize	-

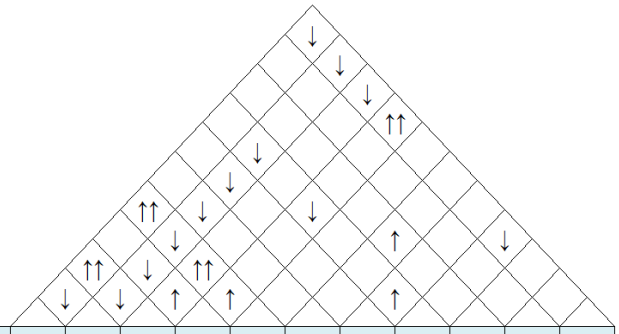

Direction of Improvement	Column #	1	2	3	4	5	6	7	8	9	10	11
	Direction of Improvement	+	-	-	+	+	+	+	-	+	+	+
Direction of Improvement	Customer Requirements (Explicit and Implicit) / Engineering Requirements	XYZ resolution	Cost	Trace Width	Flow Rate	Ink Laying Precision	Print Area	Connectivity	Power Consumption	Syringe Capacity	Substrate Thickness	Print Speed
+	Reliability	↑↑	↓	↑↑		↑↑						↓
+	Portability		↓				↓	↑		↓		
-	Noise		↓		↓				↑			↓↓
+	Versatility			↑↑	↑↑	↑↑	↑		↓	↑	↑	
-	Manual Intervention		↑				↑			↑		
+	Responsiveness		↑					↑↑				↑
+	Affordability		↑↑				↑↑		↓	↓		↓
	Target	±0.1 mm	≤$1300	12 mil to 16 mil	≥0.4 mL/s	±0.3 mm	≥200 mm × ≥200 mm	50 to 150 Mbps	≤200 W average; ≤400 W peak	≥10 mL	≥5 mm	≥200 mm/s

Figure 1 - House of Quality

We felt the customer would prioritize the requirements listed above for various reasons. The machine should have high accuracy to be effective for PCB prototyping. If the traces are too large or overlap, then it would lead to a failure of a PCB. Increased accuracy also relates to increased versatility, which we feel is a big selling point for this machine. We hope to increase surface area and support as many PCB designs as possible.

In addition, we decided customers would prefer high portability, low noise, minimized manual intervention, and high responsiveness as quality-of-life improvements. The printer

should be relatively portable to compete with other printers like Voltera and beat large and immobile mills. Using an existing 3D printer somewhat restrains this portability in terms of dimensions, but increasing wireless connectivity and decreasing print area could help. For customers to willingly use this machine on their desktop or in a workshop, it would be preferable to keep noise low so as not to bother the user. Minimizing power consumption and spending more on quieter and more power efficient parts would help reduce noise. As for manual intervention, we would like to keep the need for it as minimal as possible, only requiring the user to upload the Gerber file, swap a head if necessary, and start the printing process. However, we intend to support complete control over the machine by the user if desired.

Additionally, we would like to minimize the cost of this project to make it a less expensive product compared to alternatives.

2.7 Prototype Illustration

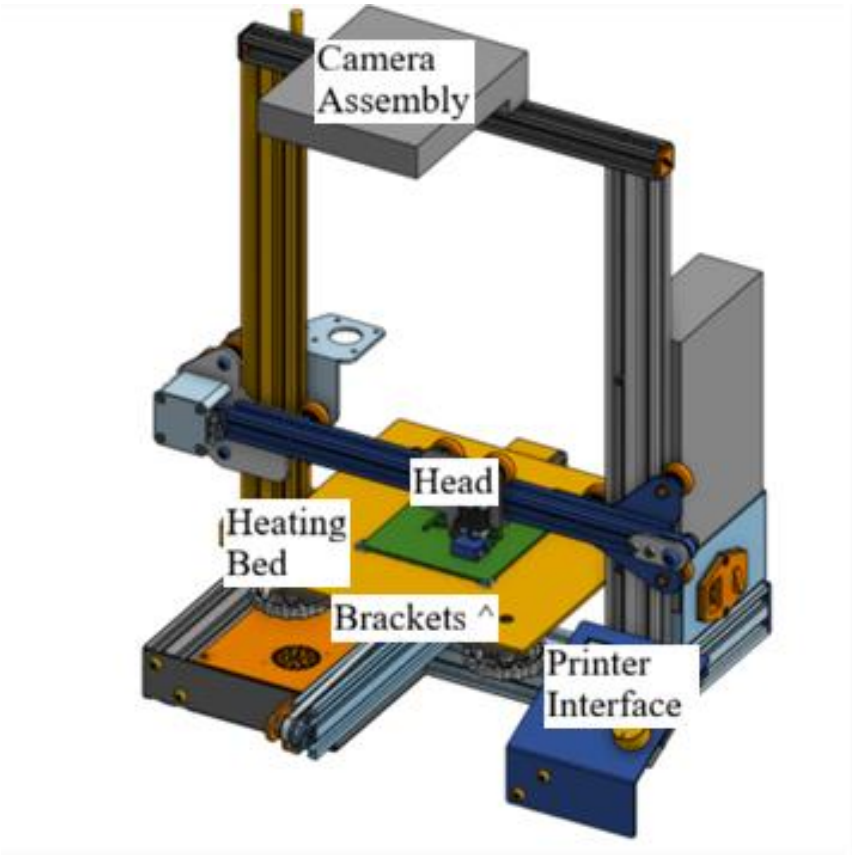

Figure 2 - Prototype Illustration

This image represents a rough draft of the finalized product. The base of it will be a modified version of an Ender 3. Most of the mechanical body will be kept the same, but the printer's electronics will be replaced. The standard dial and screen will be replaced with updated components to further electrical component replacement. A camera will be added (location may vary) to capture an image of the PCB that will be lined up with and compared to the Gerber reference. Mounts will also be added to hold the PCB in place while the ink

printer is active. The base of the printer will be replaced with a new heat bed to reach the higher temperatures needed for the silver ink to cure. The head of the printer will finally be replaced completely with a new head capable of storing an ink cartridge with a linear actuator to push silver ink onto the PCB. The head will also be designed to be modular to allow for the variety of inks (and further features in our stretch goals).

2.8 Hardware Flowchart

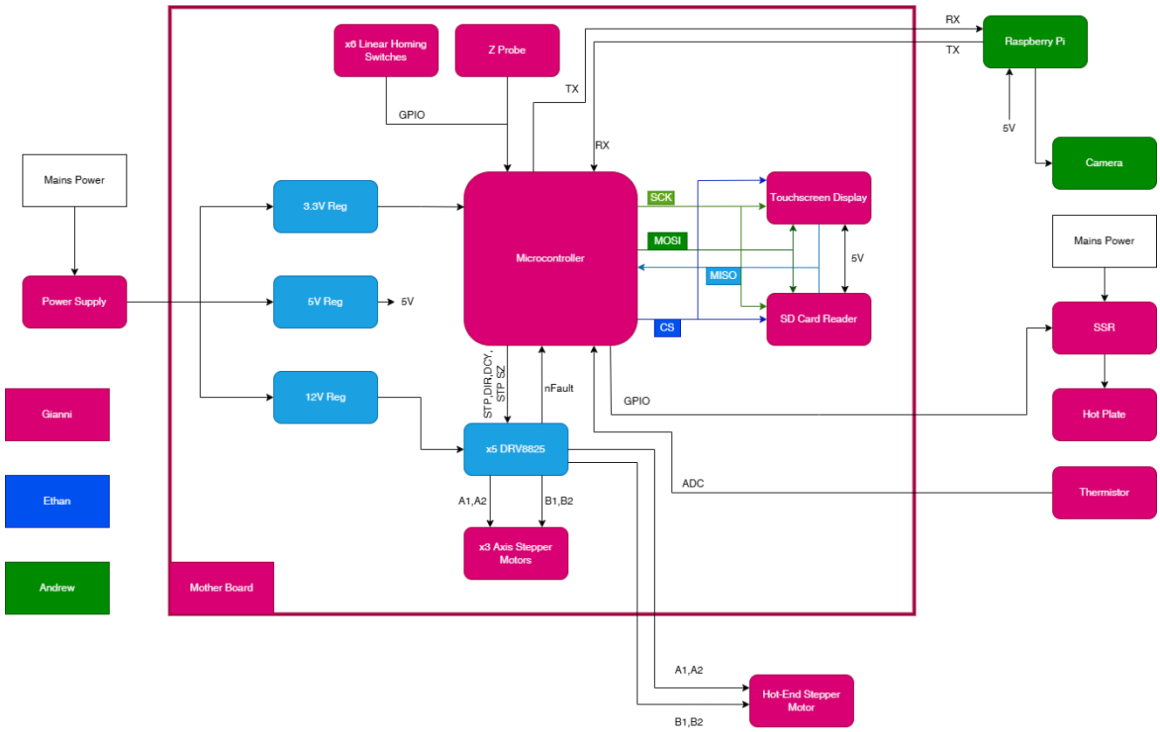

Figure 3 - Hardware Diagram Flowchart

This hardware flowchart makes a couple of assumptions. That all data lines will use some kind of protocol and for legibility we chose to not denote the exact protocol. We will be documenting the exact protocols in use in another diagram better suited for this info.

2.9 Software Flowchart

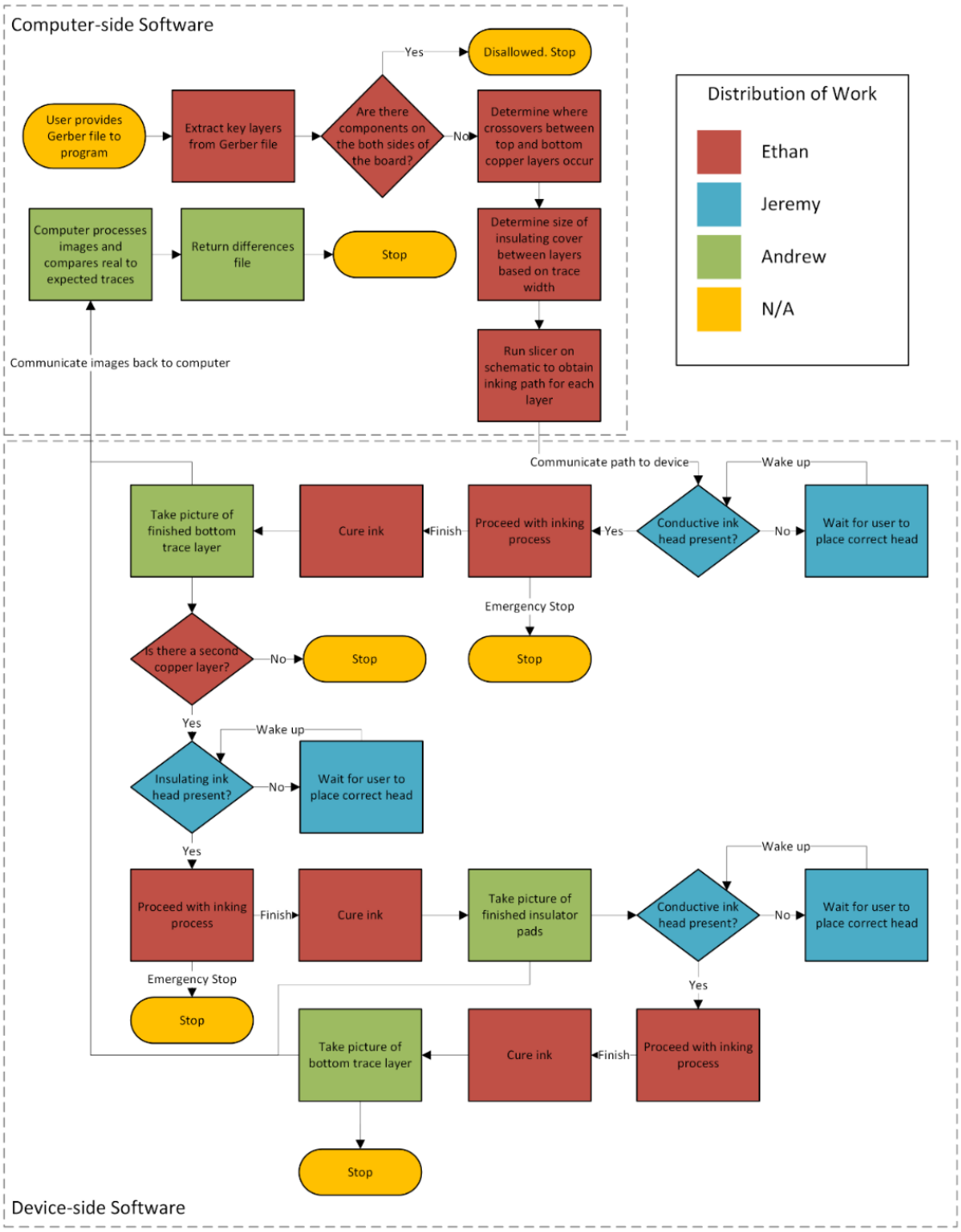

Figure 4 - Software Flowchart

Chapter 3 – Research and Investigation

3.1 Ink Material

The ink selection is one of the most important manufacturing decisions for this project as the project is designed to dispense the conductive ink and insulator ink in order to create multi-layer PCBs. Choosing the right ink style is crucial to creating low resistance conductive traces and high resistance insulator traces to create the crossovers. The method of curing is also important to the ink selection as making the project includes a method that will keep the ink stable without introducing trace shrinkage or expansion to mess with our trace widths.

3.1.1 Conductive Ink

Conductor 3 Silver Ink

The Conductor 3 Silver Ink by Voltera [1] is their third-generation ink design. The ink adds a feature over its predecessor to not need board movement when curing. The ink was designed to work with the hotplate feature on the V-One so that it could be cured on the top side when heated from below. Previous models required board flipping to move the ink closer to the heat source so that it could come to temperature and cure. Since the ink has a cure temperature of 170 Celsius it specifies that to solder components to the board it should use a solder that works at 180 C when hand soldering components. This is lower than typical soldering temperatures as in the Junior Design Lab, the soldering irons are set to 350 - 400 C this can be overcome though just through specific solder type purchases.

SS1109 Stretchable Silver Ink

The SS1109 Stretchable Silver Ink by ACI Materials [2] is another ink that is sold in the Voltera shop. This ink is designed for primarily stretchable materials to work on flexible electronics. This product primarily works with the Voltera Nova to adhere to less traditional substrates such as TPU. As this adheres only to TPU it proves a difficult option to consider as our project is working with more traditional substrates as a base goal.

CP1-5S Conductive Paint

CPI-58 Conductive Paint sold by Chipquik [3] is an interesting nontraditional alternative to the other conductive inks being examined. As CPI-58 is a conductive paint rather than curing through heating methods this paint just dries for 60-120 minutes to go from mega ohms to less than 5 ohms per square inch. When adding a cover to the paint to prevents shorts the time grows to 7 days to allow for full drying. While this turnaround time could be considered worth looking into as it is still shorter than a typical PCB ordering time especially for a low budget individual, this turnaround time is far too long for making more than one board or to consider multilayer boards.

Conductive Ink Comparison and Selection

Table 3 - Conductive Ink Comparison

	Conductor 3 Silver Ink	SS1109 Stretchable Silver Ink	CP1-5S Conductive Paint
Cure Method	Heat	Heat	Dry Time
Cure Time	15 Min	5 Min	60-120 Min
Cure Temperature	170 Celcius	120-135 Celcius	N/A
Viscosity	Not listed	25 Pa·s	100 mPa·s
Resistance	2.4 mΩ/sq cm	< 0.017 Ω/sq mm	1 Ω /Sq 4mil
Cost	$99.99	$99.99	$22.33

Due to the available inks examined the current ideal ink for this project is to stick with the Conductor 3 ink by Voltera. This ink has the advantage of being the standard ink used by the machine that our project is being compared to and its ability to be cured without needing a full covering or to be flipped in such a short time makes it well worth the cost, as seen in *Table 3 - Conductive Ink Comparison*. This ink also comes in easy 5cc standard size syringes which makes swapping out simple.

3.1.2 Insulator Ink

SI3014 Stretchable Printed Insulator

SI3014 Stretchable Printed Insulator by ACI Materials [4] is the standard insulator ink sold with the Voltera Nova. This ink provides excellent adhesion to TPU and to ACI's other inks. On the Voltera site on ink compatibility [5] they note that inks that adhere to stretchable materials such as TPU can also be compatible with rigid substrates. They note other issues could occur but generally it would be considered compatible to use this ink with an FR-4 base.

127-48D

127-48D is a dielectric material sold by Creative Materials [6]. The material is specially designed to adhere to a variety of surfaces and resists flexing and creasing. The datasheet is sparse on more details beyond basic properties, and the material can only be quoted for a price. These facts lead to the ink to be while interesting, not worth considering for the small-scale use that this project demands.

127-24PB

127-24PB is another insulator material developed by Creative Materials [7]. Unlike 127-48D which is cured through heat, 127-24PB is cured using UV light. When exposed to a 200-300 watt/inch mercury vapor lamp the material can cure in under 1 minute. As it is a UV cure there is also no risk of the material changing shape due to temperature. This ink is also blue which provides an advantage when used in combination with the project's camera vision. Since this color is far from the silver shine of the conductor ink it will be easy to detect the contours of the PCB. The biggest disadvantage of this ink though is that as it is also sold by Creative Materials, they do not seem to do small scale sales. While this ink provided many interesting properties it cannot be selected if it is too hard to source for a small scale project.

Insulator Ink Comparison and Selection

Table 4 - Insulator Ink Comparison

	SI3014 Stretchable Printed Insulator	127-48D	127-24PB
Cure Method	Heat	Heat	UV
Cure Time	5-15 Min	1 Hour	Seconds – 1 Min
Cure Temperature	135 Celsius	125 Celsius	N/A
DC Breakdown	250 V/mil	N/A	365 V/mil
Viscosity	25 Pa·s	15,000 – 20,000 cps	25,000 cps
Cost	$99.99	N/A	N/A

As seen with our final choice in *Table 4 - Insulator Ink Comparison*, the final ink was determined to be SI3014 Stretchable Printed Insulator. Due to its reasonable cure time and cost this was chosen to be the ideal ink for our project. The other two inks were interesting to research and compare especially 127-24PB due to its UV curing feature, but its lack of easy price checking kept them from being selected.

3.2 Mainboard MCU

The mainboard microcontroller serves as the central processing unit for the entire printer system. It controls all stepper motors for X/Y/Z axis movements and extrusion, processes G-code commands from uploaded files, manages the touchscreen user interface, coordinates communication with swappable head MCUs for tool identification and parameter configuration, monitors sensors and limit switches, and orchestrates the overall printing workflow. Without a capable mainboard MCU, the printer cannot execute coordinated multi-axis movements, interpret user commands, or manage the automated features that distinguish this system from manual operation. The most important factors

examined during the research phase included: GPIO pin count, processing cores, CPU frequency, supported communication protocols, wireless connectivity capabilities, ease of configuration and programming, and component availability.

Adequate GPIO pins are essential to control multiple stepper motor drivers, read limit switches and sensors, communicate with the touchscreen display, interface with head MCUs, and manage auxiliary functions such as cooling fans or heating elements. Multiple processing cores and high CPU frequency enable simultaneous management of real-time motion control, user interface responsiveness, and communication tasks without performance bottlenecks. Support for standard communication protocols including I2C, SPI, UART, and PWM is critical for interfacing with stepper drivers, displays, SD card readers, and head electronics. Many of these MCU's at least provide these communication protocols so in some cases it's the total lanes of communication is important. Wireless connectivity provides convenience for file uploads and remote monitoring, though wired alternatives remain viable. Ease of configuration impacts development time and debugging efficiency, particularly when adapting existing firmware frameworks such as Marlin or developing custom control software. Component availability affects procurement timelines and the ability to obtain replacement units if needed during prototyping. Cost considerations remain important but are balanced against the processing requirements and feature set necessary for reliable printer operation.

Note that any citation on the MCU will be on the table below all of the written sections of the specific MCU.

3.2.1 STM32WB

The STM32WB55 is part of STMicroelectronics' STM32WB series of wireless microcontrollers. It features dual ARM processor cores: a Cortex-M4 operating at up to 64 MHz for application processing and a Cortex-M0+ for radio operations. Its memory configuration includes 256 KB of SRAM and 1 MB of flash memory. The STM32WB55 comes with built-in Bluetooth 5.0 support but does not include Wi-Fi capability. The STM32WB55 provides 46 GPIO pins. It natively supports communication protocols including I2C, SPI, UART, and PWM. The device includes a 12-bit ADC with multiple channels for analog signal conversion. The dual-core architecture separates application tasks on the Cortex-M4 core from wireless communication management on the Cortex-M0+ core. It operates on a supply voltage of 1.71V-3.6V. The module features multiple low-power modes for energy efficiency. It supports external memory expansion. The STM32 platform is widely used in 3D printer control boards such as the BIGTREETECH SKR series, providing proven compatibility with printer firmware. However, the STM32WB55's dual-core wireless architecture is less common in existing printer implementations compared to standard STM32F4 series controllers. At a unit price of approximately $6.49, it is positioned as the most cost-effective option among the higher-performance microcontrollers evaluated.

3.2.2 STM32H7

The STM32H7 is one of the denser MCU choices available this is a hurdle the team has decided to consider. It operates with an ARM Cortex-M7. The processor maxes out at 550 MHz and has 564KB of ram including everything. The model provides excellent performance and gpio for the purposes of our project. The chip is commonly used in FDM printers like the ender 3 which normally contain Marlin as its firmware. This chip has the most support for Marlin, being a very common choice in the FDM space. It provides easily the most communication channels directly to the MCU. Though since it is an STM series there is still the hurdle of unfamiliar architecture this is another hurdle. Though again this keeps the development time from the firmware modification at a minimal point.

3.2.3 STM32 Chip Comparison and Selection

Table 5 - Mainboard MCU Comparison Table [8, 9, 10, 11]

	ESP32-WROOM-32	STM32WB55	STM32H723VE	MSP430FR6989
Cores	2	2	1	1
CPU Frequency	80-240 MHz	64 MHz	550 MHz	16 MHz
GPIO Pins	34	72	114	83
RAM	512 KB SRAM 448 KB ROM	256 KB SRAM 1 MB Flash	564 KB SRAM and 128 KB TCM 1 MB Flash	2 KB SRAM 128 KB FRAM
Communication Protocols	I2C, SPI, UART, PWM	I2C, SPI, UART, PWM	I2C, SPI, UART,PWM	I2C, SPI, UART, PWM
Communication rails total	5	6	13	4
Wi-Fi Support (Native)	Yes	No	No	No
Bluetooth Support (Native)	Yes	Yes	No	No

Ease of Configuration	High (Arduino, ESP-IDF)	Medium (different architecture)	Medium (different architecture)	Medium (familiar but limited resources)
Marlin compatibility	Medium	High	High	none
Availability	High (local and online)	Medium (online order)	Medium (online order)	High (local dev boards)
Cost	$6.56	$6.49	$6.12	$11.37

The STM32H7 was selected based on its processing capability, extensive communication lanes, and extensive community support within the 3D printer mainboard ecosystem. The ARM 32-bit Cortex -M4 processor operating at adjustable frequencies to a maximum of 550 Mhz, providing substantial processing power for managing real-time motion control on one core while handling user interface, communication. While single core in nature intelligent resource allocation and high speed of processing prevents UI responsiveness issues or communication delays from interfering with time-critical stepper motor control sequences. The 564 KB of SRAM provides ample memory for complex firmware implementations, buffering G-code commands, and managing multiple simultaneous tasks. The 114 GPIO pins offer adequate connectivity for stepper motor drivers (X, Y, Z, extrusion), limit switches, head communication (I2C/UART), touchscreen interface (SPI), SD card reader (SPI), and auxiliary controls.

The lack of built-in Wi-Fi and Bluetooth means if there is to be a wireless implementation it requires a separate wifi/Bluetooth module. The priority is to reduce development time and provide processing overhead though a module for wireless capability directly supports the project goal of providing a user-friendly interface for PCB prototyping. The STM32 platform benefits from exceptional community support, with extensive documentation, example projects, and active forums. Marlin firmware, the most widely-used open-source 3D printer firmware, officially supports STM32 platforms, providing a proven starting point for adaptation to conductive ink printing. This existing firmware framework significantly reduces development time compared to writing motion control software from scratch.

3.3 Motor Systems

3.4 Stepper Motor Drivers

3.4.1 Stepper Motor Driver Technologies

Stepper motor driver technologies serve as the interface between a microcontroller and a stepper motor, translating high-level commands into electrical signals applied to the motor's coils. The driver interprets step pulses and direction signals to determine which coils to energize and the sequence to produce controlled rotational motion. The selection

of an appropriate driver technology significantly impacts system efficiency, thermal performance, torque characteristics, and overall motor controllability.

Inductance to Resistance Drive

Inductance to Resistance Drivers [13] are also described as constant voltage drivers. This type of driver operates by applying a fixed supply voltage directly across the motor windings. The resulting current buildup in each winding is governed by the motor's inherent electrical time constant, $\tau = L/R$, where L is the winding inductance and R is the total series resistance (motor winding resistance plus any external resistance). At lower stepping speeds, the motor draws full current even in a holding state, causing significant I^2R power dissipation as heat, often requiring external series resistors that further waste energy. Without feedback, the driver cannot compensate for variations in supply voltage or winding resistance, leading to inconsistent motor performance. Due to these limitations, L/R drives are generally only suitable for low-speed, cost-sensitive applications where efficiency and high-speed torque are not critical concerns.

Chopper/Constant Current Drive

Chopper Drivers [13] also known as constant current drivers, address the fundamental shortcomings of the L/R drive by actively regulating the current delivered to each motor winding. Rather than relying on the passive L/R time constant, a chopper driver continuously monitors winding current and uses high-frequency switching (chopping) to maintain it at a precise, user-defined setpoint. It is made up of more complex circuitry and higher component cost than L/R drivers. It requires accurate current sensing for proper regulation.

Stepper Motor Driver Type Comparison and Selection

Table 8 - Stepper Motor Driver Type Comparison -- Generated with GPT-5 mini
pg.**Error! Bookmark not defined.**

	L/R (constant-voltage)	Chopper (constant-current)
Current Regulation	Passive (determined by L/R and added resistance)	Active (regulated via chopping)
Supply Voltage	Drops significantly	Retained much better
Torque at High Speed	Lower (I^2R losses)	Higher (reduced resistive losses)
Efficiency	Low	High

	L/R (constant-voltage)	Chopper (constant-current)
Complexity	Low	Moderate to High
Microstepping Support	No	Yes
Cost	Low	Moderate to High
EMI/ Noise	Low	Moderate (due to switching)
Typical use cases	Low-speed, low-cost applications	High-performance, precision motion control

As seen in *Table 8,* a chopper/constant current driver is selected. The application requires reliable torque across a range of stepping speeds, efficient operation to minimize heat generation within the enclosure, and support for microstepping to reduce vibration and improve positional accuracy. The added circuit complexity of a chopper driver is well justified given these performance requirements, and numerous highly integrated driver ICs (such as the TMC2208, DRV8825, or A4988) are commercially available, making implementation straightforward.

3.4.2 Stepper Motor Drivers

Some of the specifications we wanted to check against for the sake of our design were the compatibility with our system, current rating and some form of encoding. Marlin compatibility was decided from their site where they list out the drivers they support from TMC [14]. They have more than just TMC drivers that are supported but they are not as extensive. So it was viewed as more supported than others, for the sake of development time that was seen as favorable. On top of that at first glance there were more modern features in the TMC boards.

TMC4361

This is a controller/driver TMC chip while not directly listed as supported by Marlin does have many positives. This can operate with some external circuitry as a motor driver but is typically driven with TMC 2160. It can act as a motion controller where it takes in an encoder motor side with a multitude of encoder types. It includes UART, SPI, ABN differential and ABN single line inputs. A strong choice that needs to be verified for Marlin support before making a final choice. This may not even need support since it is not directly the driver, but it controls the closed loop feedback system.

TMC2160

Only a motor driver that controls the stepper motor. We may not use a close loop control system on our motors. That may be the solution if it is not seen as necessary for the precision of our system. Of course, we also may use this part in conjunction with other parts to implement it. This also means we are not comparing any drop-in replacements in this section.

TMC5160

Another controller/driver TMC chip that can operate our motors directly. It requires a MOSFET bridge in the application circuits provided in the datasheet. The phases of the stepper motor are connected between the bridge of MOSFET's to operate. There is also a 'charge dump' circuit that is within that application circuit for use. The datasheet outlines a very similar implementation as the TMC2160 for the driving mechanism, so it may be possible to implement them serially.

DRV8825

The DRV8825 is a versatile stepper motor driver from Texas Instruments designed to control bipolar stepper motors with high precision and efficiency. It supports microstepping up to 1/32-step, allowing for smooth and quiet motor operation, and can deliver up to 1.5–2.2 A per phase with adequate cooling. The driver features adjustable current limiting, over-temperature shutdown, and short-circuit protection, making it robust for a variety of applications such as 3D printers, CNC machines, and robotics. Its simple interface—using step and direction inputs—makes it easy to integrate with microcontrollers, while its compact design allows for dense circuit layouts without sacrificing performance. The DRV8825 is common in mid-range 3D printers and CNC machines. Overall, the DRV8825 balances ease of use, reliability, and fine motor control in a cost-effective package.

Driver Comparison Table

The team is planning on using Marlin as a base for our firmware so we follow the recommendations of the Marlin firmware driver compatibility as it would simplify our implementation of drivers with our firmware. The team decided that this DRV series of boards has compatibility and simplifies development time.

Table 9 - Motor Driver Comparison and Selection

	TMC4361	TMC2160	TMC5160	DRV8825
Control board	Yes	No	Yes	No

Required separate phase driving	Yes	No	No	No
MOSFET bridge required	Yes	No	No	No
Marlin support	No	Yes	Yes	Yes
ABN encoding	Yes	No	Yes (single-ended)	No

We chose the DRV8825 because it is widely supported, easy to integrate, and has well-documented application notes from the manufacturer. While there are many other stepper drivers available, the primary differences are in the recommended external circuitry and power specifications. The team decided to start with the DRV8825 alone, since it provides the necessary functionality for basic stepper control without requiring a more complex motion controller. This approach also saves development time, and if more advanced features or hybrid control are needed in the future, we can consider upgrading to a driver like the TMC5160 that integrates additional capabilities.

3.5 Movement System

This section is to inform the decision to retrofit the Ender 3 into the same or different movement system for the use case of this senior design project. different movement system for the C.I.P may allow for better accuracy, a better overall system at the cost of significant development time spent on readjusting the geometry of the entire machine. This is likely not something we change without significant reason for doing so. An example of a situation for why we might make this change is we have an issue reaching the precision level required to accomplish the manufacturing process. One goal is to highlight that this is a possible solution, even if costly.

3.5.1 Sidewinder

This is currently the movement system the Ender 3 comes with off the shelf. This system assigns one motor per axis of movement including the extrusion process. This also only binds the movement to one extreme of the machine for the movement. This makes the machine have more ‘give’ when the movement occurs closer to these extremes. The ender 3 currently operates in this movement schema. The operational issue

3.5.2 Core XY

This schema will combine the movements of the X- and Y-axis of the machine in order to move the Z-axis. While this scheme does require 1 more motor, it includes more attachment points. While it adds costs through physical emplacements it reduces the give by adding

mounting points for the movement axis. The Z-axis will move based on multiple XY motors moving [15].

3.5.3 Gantry-Only System

The gantry is the name given to the X axis in the sidewinder system. This gantry may be the only thing necessary to move for the ink to be placed onto the PCB. This is a benefit because it simplifies the system as a whole. This could also allow for a more specific plate for the PCBs.

3.5.4 Movement System Comparison and Selection

Table 10 - Movement System Comparison

	Sidewinder	Core XY	Gantry-Only
Development time required (estimated)	1-2 hours	20 hours	10 hours
Robustness	Least	Most	Middling
Cost	Minimal	~$280	Low + labor

For the ease of retrofitting, we are likely not to stray past sidewinder or gantry only system since we do not want to add mechanical complexity to our system. Gantry only is a genuine contender since the Y axis being the bed may genuinely cause issues in the mounting mechanism of our substrate. Though little to no adjustment is required to keep the machine to its default sidewinder system. This was not part of the initial scope so this is not a priority but may be part of our problem-solving process. The team wishes to stress that anything other than the sidewinder system is unlikely. This cuts a lot of development time out of the rest of the system, something that is none of the team's expertise.

3.6 Hotplate

The current Ender 3 hot plate device specifications list a bed temperature of ~100C [16]. Since the conductive ink requires a temperature of ~170C and the insulator ink requires a temperature of ~135C in order to cure this means that alternative heaters must be explored or the bed must be upgraded.

3.6.1 Bed Heating Technologies

Initial bed heating technologies were researched with ChatGPT pg. 180.

PCB Trace Heaters

PCB trace heaters are simply traced built into a traditional PCB but used only for the heat the traces put off as a function of their resistance rather than use for having components on the board. Unfortunately due to the simplicity of this design, it also suffers the inability to heat beyond ~120C due to heat loss and inefficiency.

Silicone/Aluminum Heaters

Silicone rubber heaters are designed with Nickel-Chromium (NiCr) wire embedded in silicone. The silicone casing is then bonded to an aluminum plate for heat distribution. This allows for higher temperatures (200° to 250°C) to be reached. The drawback of this method is typically that it will lead to the need for mains power, which is not necessarily a bad thing for our project as we are already using it. However, it will require proper safety considerations.

Ceramic Heaters

Ceramic heaters are devices that generate heat in a ceramic or insulative element as a voltage is created across [17]. These devices convert the electrical energy directly into heat in order to maintain efficiency at 85-90% [18]. They are also considered very stable heaters, but their largest drawbacks are cost and they are very brittle.

Cartridge Heaters

Cartridge Heaters are devices designed for localized heating in specific parts of a machine. Typically on 3D printers, they are used in the extruder hot end to heat filament before its extruded. Typically, they are heated via electrical resistance heating where the NiCr wire is wrapped around a ceramic core to then pass the heat generated through the high resistance material to the area around the cartage [19]. This process is similar to the two above methods but is designed to be more localized rather than spread around an area, as the other two methods spread the heat across a plate.

Heater Technology Comparison

Table 11- Heater Technology Comparison – Generated with ChatGPT pg. 180

	PCB Trace Heater	Silicone + Aluminum Heater	Ceramic Heater	Cartridge Heater
Basic construction	Copper traces etched on FR4 board	Resistive wire or foil embedded in silicone, bonded to metal plate	Resistive element embedded in ceramic body	NiCr coil wound on ceramic core inside metal tube
Typical use case	Consumer 3D printer beds	Industrial hotplates, upgraded printer beds	Industrial heaters, band heaters, lab hotplates	Hotends, molds, dies, localized heating
Heat distribution	Moderate (depends on trace layout)	Excellent (aluminum spreads heat evenly)	Good but depends on geometry	Poor unless multiple units used (localized heating)

Power density	Low	Medium–high	High	Very high (can exceed 200 W/in²)
Max practical temperature	~100–120 °C	200–250 °C+ (typical)	300 °C+ (often much higher)	300–650 °C+ depending on sheath
Heat-up speed	Slow	Fast	Fast	Very fast (small thermal mass)
Uniformity over large area	Fair	Excellent	Fair–good	Poor (point source)
Mechanical integration	Integrated bed	Bonded to plate (easy retrofit)	Requires mounting structure	Requires drilled holes / machining
Voltage options	Low voltage (12–24V DC)	Often AC mains (120/230V)	AC mains common	AC or DC
Efficiency	Moderate	High (good coupling + insulation)	High	Very high locally, poor globally
Control stability	Easy (low power)	Good (with PID tuning)	Good	Can overshoot easily due to high density
Cost	Very low	Moderate	Moderate–high	Low–moderate per unit
Reliability at high temp	Poor	Good	Excellent	Excellent
Best for 170 °C bed?	No	Yes (best option)	Possible but uncommon	Not ideal alone

As seen in the comparisons of *Table 11* the best option for modifying the hotplate of the Ender 3 base printer would be to use a silicone and aluminum heater plate. The reasonable cost for its ability to generate high temperatures as well as the uniformity of those temperatures will be ideal for curing PCBs of varying areas.

3.6.2 Bed Heater Components

Keenovo Silicone Heater

The Keenovo Silicone Heater for the Ender 3 [20] is a upgraded heat bed for the Ender 3. The silicon heater comes matching the same area as the Ender3 hotplate and comes with holes for the mounting screws on the Ender 3 bed. Keenovo also sells additional components such as the thermistor for monitoring the bed temperature and an SSR to connect it to mains power in order to generate the wattage needed to heat the bed to ~170C. This printer comes in a variety of voltages at 350W and for the part consideration we would go with the 120V option as it should be capable of reaching the temperatures needed when connected to an SSR for power. This silicon heater upgrade lacks an aluminum plate to attach it to so if purchased it would be necessary to machine or order an aluminum plate that can be attached to the heater.

K2 Plus Heated Bed Kit

The K2 Plus Heated Bed Kit [21] is a heat bed upgrade kit sold by Alpha 3D Lab. This heater kit is designed to be compatible with the K2 3D printer. This upgrade kit advertises general support for temperatures up to 110C. The kit comes with the heated bed, a build surface of PEI or glass and the mounting hardware needed to install the kit. This product does not list its wattage or voltage but does advertise even heating.

120V/220V 800W Hot Bed Silicone Heating Pad

This heating pad is sold by Walmart [22]. The heating pad lacks specifications but advertises 800W when connected to 120/220V. Presumably this part connects to mains power, but the lack of specification and the size listed at 350 x 354 mm^2 imply that this part is not suitable for the Ender 3 shell the project is using.

Bed Heater Comparison and Selection

Table 12 - Bed Heater Comparison

	Keenovo Silicone Heater	K2 Plus Heated Bed Kit	120V/220V 800W Hot Bed Silicone Heating Pad
Price	$58.27	$129.95	$49.58
Area	235 mm^2	350 mm^2	350 x 354 mm^2
Wattage	350W	N/A	800W
Voltage	24/120/220V	N/A	120/220V

Additional Components Needed	Yes	No	Yes

As seen in *Table 12* the best option for the project is to go with the Keenovo Silicone Heater. The ability for several voltages as well as its print area matching the Ender 3 shell of this project make it an ideal selection to replace the built-in hot plate. While more components will be needed to be purchased to support this bed heater Keenovo offers them on its online store so the only additional part needed would be the aluminum plate top which can be purchase or machined relatively easily.

3.7 Head Mounting System

The mounting mechanism provides the physical and electrical interface between swappable printer heads and the printer's main carriage assembly. The mounting system must enable rapid tool changes while maintaining precise positioning, mechanical rigidity, and reliable electrical connections for power, communication, and control signals. The mechanism directly impacts the feasibility of the quick-swap capability that is central to this project's design goals. Key selection criteria include ease of attachment and removal, positioning repeatability, mechanical stability during printing, electrical connection reliability, alignment accuracy, durability through multiple swap cycles, and cost.

3.7.1 Mounting Mechanism Technologies

Magnetic Coupling

Magnetic coupling uses permanent magnets embedded in both the printer carriage and swappable head to provide self-aligning attachment. The magnetic attraction pulls the head into position and holds it securely during operation. Electrical connections are typically made through spring-loaded pogo pins that compress when the head attaches. Magnetic systems enable very rapid tool changes with minimal user effort—simply bringing the head near the carriage causes automatic alignment and attachment. However, magnetic force provides limited mechanical rigidity compared to mechanical clamping systems, and strong vibrations or high-speed movements may cause slippage. Positioning repeatability depends on the precision of the magnetic and alignment features. The strength of the magnetic hold must balance secure retention against ease of removal.

Mechanical Coupling

Mechanical clamp systems use lever-actuated or screw-driven clamps to firmly secure the head to the carriage. The clamping force provides excellent mechanical rigidity and prevents any movement during printing operations. Electrical connections are made through pin headers, edge connectors, or dedicated multi-pin connectors that mate when the head is clamped in place. Mechanical clamps provide very secure attachment but require more deliberate user action to engage and release compared to magnetic systems. Repeatability is excellent if proper alignment features (pins, slots, or mechanical stops) are incorporated. Common implementations include cam levers, toggle clamps, or thumbscrews.

Quick-Release Lever

Quick-release lever mechanisms, similar to those used on bicycle wheels or camera mounts, provide rapid attachment and removal with a single lever action. The lever cams the head into a locked position against mechanical stops, providing good rigidity while enabling tool-free swaps in seconds. Alignment features such as guide pins or chamfered surfaces ensure consistent positioning. Electrical connections are made through mating connectors or spring contacts that engage when the lever is locked. This approach balances swap speed with mechanical security. The lever mechanism requires careful design to provide adequate clamping force without being difficult to operate.

Threaded Attachment

Threaded attachment uses screws or bolts to secure the head to the carriage mounting plate. This simple, low-cost approach provides maximum mechanical rigidity and excellent repeatability when precise mounting holes are used. Electrical connections can be made through screw terminals, wire connectors, or headers. However, threaded attachment is the slowest method, requiring tools (screwdriver or Allen key) and multiple turns to fasten or remove. This approach is unsuitable for applications requiring frequent tool changes but acceptable for semi-permanent installations or infrequent swaps. The simplicity and low cost make it attractive for initial prototyping before implementing more sophisticated quick-change mechanisms.

Bayonet Mount

Bayonet Mount: Bayonet mounts use a twist-lock mechanism where the head is inserted and rotated to engage locking tabs or pins. This provides secure attachment with a quarter-turn or half-turn motion. Bayonet systems are common in camera lenses, light bulbs, and quick-connect fittings. Alignment features ensure consistent positioning, and spring-loaded contacts or connectors provide electrical connections. The rotational locking action provides good mechanical security while enabling relatively fast tool changes. However, the design requires precision machining of the bayonet features and careful attention to rotational clearances.

Kinematic Coupling

Kinematic Coupling: Kinematic coupling uses precisely positioned spheres and V-grooves or conical seats to achieve highly repeatable positioning through geometric constraint. A kinematic mount uses three spheres contacting three V-grooves (or similar constraint patterns) to exactly constrain all six degrees of freedom. This approach, common in precision optics and metrology, provides exceptional repeatability (often sub-micron). Magnets or clamps provide the coupling force. Electrical connections are made through pogo pins or connectors. While kinematic couplings offer superior positioning accuracy, they require precision manufacturing and are more expensive than simpler mounting methods. This approach is best suited for applications where positioning repeatability is critical.

Mounting Mechanism Comparison and Selection

Table 13 - Mounting Mechanism Comparison Table

	Swap speed	Mechanical Rigidity	Complexity	Cost
Magnetic Coupling	Very Fast	Medium	Medium	Medium
Mechanical Clamp	Medium	Very High	Medium	Low
Quick-Release Lever	Fast	High	Medium	Medium
Threaded Attachment	Slow	Very High	Low	Low
Bayonet Mount	Fast	High	Medium-High	Medium
Kinematic Coupling	Medium	High	High	High

The magnetic coupling mechanism was selected for the swappable printer head system based on its rapid swap capability, self-aligning characteristics, and user-friendly operation that directly supports the project's core goal of enabling quick tool changes. The Voltera V-One, a commercial conductive ink PCB printer, successfully implements magnetic tool mounting for swappable heads including the probe, conductive ink dispenser, and solder paste dispenser [23], demonstrating this approach's viability in professional PCB printing applications. Neodymium magnets embedded in both the carriage mounting plate and each swappable head provide automatic alignment and secure retention through magnetic attraction—the user simply brings the head near the carriage mounting plate, and the magnetic forces pull it into the correct position within milliseconds. This approach enables complete tool changes in approximately 3-5 seconds without requiring fasteners, precise manual alignment, or visual verification of connector engagement. The magnetic approach best supports the project's goal of demonstrating rapid, user-friendly tool changes that enable multi-material or multi process PCB fabrication workflows. Component costs are moderate, making this economically feasible for implementing multiple swappable head options within the project budget.

3.7.2 Electrical Connection Technology Comparison

The electrical connection system provides power, ground, and communication signals between the printer's main controller and the swappable head electronics. The connection must be reliable, support the required pin count, withstand multiple mating cycles, and align automatically with the mechanical mounting system. Key selection criteria include pin count capacity, contact reliability, ease of mating and unmating, current carrying

capacity, signal integrity for communication protocols, durability through swap cycles, and cost.

Pogo Pins

Pogo pins are spring-loaded contacts that compress when pressure is applied, creating reliable electrical connections without requiring precise alignment. The pins are typically mounted in a fixed array on one side (usually the carriage), while corresponding flat contact pads are placed on the mating side (the swappable head). The spring mechanism accommodates minor misalignment and maintains contact pressure during vibration. Pogo pins are available in various heights, diameters, and current ratings. They provide excellent mating ease since the spring action automatically compensates for positioning variations. The gold-plated contacts resist oxidation and corrosion. Pogo pins are rated for thousands to tens of thousands of mating cycles. Individual pogo pins cost approximately $0.50-3.00 depending on specifications, making a complete connector assembly moderately expensive for higher pin counts.

Pin Header/Sockets

Standard pin headers and sockets use rigid pins inserted into spring contacts within a plastic housing. This is the most common connector type in electronics prototyping and PCB applications. Headers are available in single-row, dual-row, or custom configurations with virtually unlimited pin counts. The connections are highly reliable once mated, providing excellent electrical performance and current capacity. However, proper alignment is required during mating—the pins must align with the socket receptacles, requiring deliberate user action. Durability is adequate for moderate swap frequencies (hundreds of cycles) but inferior to pogo pins for very frequent mating. Pin headers are extremely inexpensive ($0.50-3.00 for a complete header/socket pair regardless of pin count), making them the most economical option. Standard 0.1-inch (2.54mm) pitch headers are ubiquitous and widely available.

Edge Connectors

Edge connectors use spring contacts that grip the edge of a PCB with exposed copper pads. The PCB edge acts as one half of the connector, eliminating the need for a mated connector on that side. Edge connectors are common in computer expansion cards and modular electronics. They support moderate to high pin counts in a compact form factor. Contact reliability is good when the PCB edge is properly plated and the connector maintains adequate spring tension. Edge connectors require the swappable head to have a PCB with an edge-card finger pattern, which adds design constraints. Mating requires sliding the card edge into the connector, which is straightforward but less convenient than self-aligning options like pogo pins. Edge connectors cost approximately $2-10 depending on pin count and specifications.

Magnetic Pogo Connectors

Magnetic pogo connectors combine spring-loaded pogo pin contacts with integrated magnets that provide both electrical connection and mechanical alignment. The magnetic attraction pulls the connector halves together while the pogo pins compress to establish

electrical contact. Products like Apple's MagSafe connectors or various magnetic USB adapters demonstrate this technology. These connectors provide the ultimate in ease of use—simply bringing the halves near each other causes automatic connection. The magnetic alignment tolerates significant initial misalignment. Contact reliability is good, and durability is exceptional (50,000+ cycles). However, magnetic pogo connectors are expensive, particularly for higher pin counts. Complete assemblies cost $15-50 depending on pin count and current capacity. Availability of standardized products is limited compared to conventional connectors.

Blade Contacts

Blade contacts use flat spring contacts that press against flat conductive surfaces or blade terminals. These are simpler than edge connectors with defined PCB fingers, instead of using basic contact pads. The spring contacts provide adequate reliability but less positive engagement than pin/socket or edge connector systems. Contact resistance can be higher, and contact reliability depends on maintaining clean surfaces and adequate spring pressure. This approach is inexpensive and simple to implement but provides inferior performance compared to dedicated connector systems. Blade contacts are suitable for low-frequency connections or applications where cost is the primary driver.

Screw Terminals

Screw terminals use threaded posts where wires are secured with screws or clamping plates. This provides the most secure and reliable electrical connection with the highest current capacity. Screw terminals are common in power distribution, motor controllers, and industrial equipment. However, they are completely unsuitable for quick-change applications since each wire must be individually loosened and tightened using a screwdriver. Connection and disconnection take minutes rather than seconds. Screw terminals are only appropriate for semi-permanent connections where tool changes are infrequent. They are included in this comparison for completeness but are impractical for a swappable head system requiring rapid tool changes.

Electrical Connection Technologies Comparison and Selection

Table 14- Electrical Connection Technologies Comparison Table

	Pin Count	Contact Reliability	Mating Ease	Swap Cycles	Current Capacity	Cost
Pogo Pins	2-50+	Good	Excellent (self–alignment)	10,000+	2-8 A	Medium-High
Pin Header/ Socket	2-100+	Excellent	Good (requires alignment)	500-1000	1-5 A	Low

Edge Connector	10-100+	Good	Good	500-1000	3-50 A	Low-Medium
Magnetic Pogo Connectors	2-20	Good	Excellent (magnetic alignment)	50,000+	2-8 A	High
Blade Contacts	10-50	Medium-Good	Medium	500+	1-25 A	Low
Screw Terminals	2-20	Excellent	Poor (requires tools)	50-100	10-150 A	Very Low

The pin header and socket electrical connection system were selected based on its excellent reliability, low cost, and adequate performance for the application. A standard 0.1-inch pitch dual-row pin header provides connections for power, ground, communication, and additional signals. An 8-pin or 10-pin header accommodates all required signals with room for expansion. The header/socket combination costs less than $2 for a complete mated pair, making it the most economical option. Contact reliability is excellent once mated, and the rigid pin design provides stable connections during printer operation. While pin headers require deliberate alignment during mating—users must visually align the pins with the socket—this is a reasonable requirement for a swappable head system where tool changes occur between prints rather than during operation. The header/socket interface is familiar to anyone with electronics experience, reducing the learning curve. The 500-1000 cycles durability rating provides substantial margin for the anticipated usage, as the prototype is expected to undergo dozens of head swaps during prototyping, testing, and demonstration phases. Standard headers are universally available from electronics distributors, ensuring easy procurement and replacement. Given budget constraints, the pin header approach delivers sufficient functionality at minimal cost.

3.8 Ink Dispensing System

The dispensing mechanism determines the fundamental method by which conductive ink is forced through the nozzle onto the substrate. Different dispensing technologies use distinct physical principles to generate the force required to overcome ink viscosity and surface tension. The selection of dispensing technology establishes the basic architecture of the ink delivery system and constrains subsequent choices for pressure control and flow regulation. Key selection criteria include compatibility with conductive ink viscosity, achievable precision for target trace widths, mechanical complexity, required auxiliary systems (compressed air, pumps), and cost.

3.8.1 Dispensing Pressure Technologies

Pneumatic Pressure Dispensing

Pneumatic systems apply compressed air to the ink reservoir, forcing material through the nozzle by air pressure. The fundamental mechanism relies on pneumatic force transmitted through the ink column to the nozzle orifice. Air pressure creates a positive pressure

differential that drives flow. This technology requires a compressed air source (compressor or bottled gas) and some form of pressure regulation (manual or electronic). Pneumatic systems accommodate a wide range of ink viscosities by adjusting pressure levels—higher pressures to overcome resistance from thicker materials.

Mechanical Displacement (Syringe/Plunger)

Mechanical displacement systems use a moving plunger or piston to physically push ink through a confined chamber (typically a syringe barrel). The plunger advances into the ink-filled chamber, reducing available volume and forcing material out through the only available exit—the nozzle. This positive displacement approach does not require compressed air. The mechanism inherently provides volumetric control since plunger advancement directly corresponds to displaced ink volume. Linear actuators such as lead screws, rack-and-pinion drives, or direct motor coupling provide the mechanical force to extend the plunger.

Auger/Screw Feed

Auger or screw feed systems use a rotating helical screw (Archimedes screw principle) contained within a close-fitting barrel. As the screw rotates, threads mechanically advance ink along the barrel toward the nozzle. This positive displacement mechanism can handle extremely viscous materials including pastes and semi-solids. The physical action of the rotating screw continuously moves material forward regardless of back-pressure. Precision-manufactured screws with tight barrel tolerances prevent back-flow and provide consistent delivery. This technology is common in industrial dispensing of adhesives, sealants, and very thick pastes.

Piezoelectric Jetting

Piezoelectric dispensing generates rapid pressure pulses using piezoelectric crystals that deform when voltage is applied. The crystal's mechanical deformation creates a pressure wave in a small ink chamber, ejecting individual droplets through a nozzle orifice. This non-contact method deposits discrete droplets rather than continuous beads. The technology operates only with low-viscosity fluids that can be ejected by the brief pressure pulse. Each droplet ejection occurs independently, enabling very high precision and complex patterns. However, specialized components and high-frequency electronics significantly increase system complexity and cost.

Gravity Feed

Gravity feed systems rely on gravitational force to pull ink downward from an elevated reservoir through tubing to the nozzle. Flow rate depends on fluid density, viscosity, and height differential (hydraulic head). This extremely simple approach requires no pumps, compressors, or actuators. However, it provides minimal control over flow rate and works only with low-viscosity materials that flow readily under gravity. The lack of active pressure generation makes precision control difficult. Gravity feed is generally unsuitable for controlled trace deposition applications.

Dispensing Technology Comparison and Selection

Table 15 - Dispensing Technology Comparison Table

	Precision	Flow Control	Viscosity Range	Complexity	Cost	Maintenance
Syringe Pump (Stepper-Driven)	High	Excellent	Medium-High	Low	Low	Low
Pneumatic Pressure	Medium-High	Good	Low to High	Medium	Medium	Medium
Auger Screw	Very High	Excellent	Low to High	High	High	High
Piezoelectric Jetting	Very High	Excellent	Low	Very High	Very High	Medium
Gravity Feed	Low	Poor	Low	Very Low	Very High	Low

The syringe pump dispensing method was selected based on its balance of precision cost-effectiveness, and ease of integration. The stepper motor-driven plunger mechanism provides sufficient precision to achieve the target trace width of 12-16 mils while maintaining compatibility with conductive inks in the medium to high viscosity range. The technology requires minimal external components beyond a standard NEMA stepper motor, linear guide rails, and a syringe assembly, all of which can be sourced economically. The control system integrates directly with the existing printer firmware, as stepper motor control is already implemented for the X/Y/Z planes. Maintenance requirements are low, consisting primarily of periodic syringe replacement and occasional cleaning. While pneumatic systems offer wider viscosity compatibility and auger systems provide superior precision, the syringe pump method provides adequate performance for PCB trace printing applications at significantly lower cost and complexity. The lack of compressed air requirements also simplifies the overall system design and improves portability.

3.8.2 Pressure Control System Part

The pressure control system regulates the force applied to dispense conductive ink through the nozzle. Precise pressure control is critical for achieving consistent trace widths, maintaining uniform flow rates, and preventing over-dispensing or under-dispensing during printing operations. The pressure control system must provide sufficient force to overcome ink viscosity and nozzle resistance while offering fine adjustability to accommodate different ink formulations, nozzle sizes, and printing speeds. Key selection criteria include pressure range, control precision, response time, ease of integration, cost, and compatibility with dispensing technology.

Manual Pressure Regulator

A manual pressure regulator uses a mechanical adjustment knob to set output pressure from a compressed air source. The operator manually adjusts the regulator to achieve the desired dispensing pressure. A pressure gauge provides visual feedback of the current setting. This approach is simple and inexpensive but requires manual intervention to change pressure settings and cannot provide real-time pressure adjustments during printing operations.

Electronic Pressure Regulator

Electronic pressure regulators accept analog control signals (typically 0-5V or 4-20mA) or digital commands (I2C, SPI) to dynamically adjust output pressure. These devices use electromechanical actuation to modulate internal valves, providing precise closed-loop pressure control. Electronic regulators enable real-time pressure adjustment synchronized with printer movements, allowing pressure to vary based on printing speed, direction changes, or other operational parameters. Response times are typically in the range of 50-200 milliseconds.

Stepper Motor Plunger

A stepper motor-driven plunger mechanism directly pushes ink through a syringe without requiring compressed air. The motor extends or retracts a plunger at controlled rates, with pressure, determined by the combination of motor force, advancement rate, and ink resistance. This method provides volumetric control rather than pressure control. It eliminates the need for compressed air systems but requires mechanical components and motor control electronics.

Solenoid Valve (On/Off)

A simple on/off solenoid valve either allows or blocks flow from a compressed air source at a fixed pressure. Dispensing is controlled by rapidly pulsing the valve open and closed. This method provides very fast response times but limited control precision. Flow rate is adjusted by varying pulse width (duty cycle) rather than actual pressure modulation. This approach is suitable for applications where simple start/stop control is sufficient.

Proportional Solenoid Valve

Proportional Solenoid Valve: Proportional solenoid valves accept analog control signals (typically PWM or 0-10V) to modulate valve opening, providing variable output pressure. These valves offer a middle ground between simple on/off solenoids and precision electronic regulators. Response times are fast, typically 20-100 milliseconds.

Syringe Pump

Syringe pump systems use stepper motors to extend a plunger at precise, controlled rates, displacing specific volumes of material. Rather than controlling pressure directly, this method controls the volumetric flow rate. Pressure varies naturally based on flow resistance. This approach provides excellent repeatability for dispensing fixed volumes but does not directly regulate pressure. It is well-suited for applications where consistent volume delivery is more important than pressure control.

Pressure Control System Comparison and Selection

Table 16 - Pressure Control System Comparison Table

	Pressure Range	Control Precision	Response Time	Adjustability	Complexity	Cost
Manual Pressure Regulator	0-100 PSI	Medium	Slow	Manual only	Very Low	Very Low
Electronic Pressure Regulator (I2P)	0-100 PSI	High	Fast	Real-time (analog/digital)	Medium	Medium-High
Stepper Motor Plunger	Variable (mechanical)	Very High	Medium	Programmable	Low-Medium	Low
Solenoid Valve (On/Off)	Fixed (supply pressure)	Low	Very Fast	On/Off only	Low	Low
Proportional Solenoid Valve	0-100 PSI	Medium-High	Fast	Analog/PWM control	Medium	Medium
Syringe Pump (Volume Control)	N/A (volumetric)	Very High	Medium	Programmable	Low	Low

The stepper motor plunger method was selected based on its simplicity, cost-effectiveness, and elimination of compressed air requirements. A stepper motor-driven linear actuator directly advances a syringe plunger to dispense ink, with flow rate controlled by motor step rate. This approach requires only a standard NEMA stepper motor, linear guide rails, and a syringe assembly—all components already existing from 3D printer construction. The system integrates directly with existing printer firmware since stepper motor control is already implemented for X-, Y-, and Z-axes. While this method provides volumetric control rather than direct pressure control, testing demonstrated that controlled plunger advancement rates produce consistent trace widths when paired with appropriate nozzle sizing. The absence of compressed air requirements significantly simplifies the overall system, improves portability, and reduces cost. Total component cost for the plunger mechanism is approximately $30-50 compared to $150-400 for electronic pressure regulators plus compressed air system costs. Maintenance requirements are minimal, consisting primarily of periodic syringe replacement. For a student project with budget

constraints, the performance of the stepper plunger method is adequate for PCB prototyping applications.

3.9 Nozzle

The dispensing nozzle is one of the main components through which the conductive ink is deposited onto the PCB substrate. Nozzle geometry, tip design, and internal diameter directly determine the achievable trace width, flow characteristics, and dispensing precision. The nozzle must be compatible with the selected dispensing technology and capable of producing consistent trace widths in the target range of 12-16 mils. Key selection criteria include tip geometry, gauge size (internal diameter), material compatibility with conductive inks, ease of replacement, and cost.

3.9.1 Nozzle Technologies

Straight (Flat End)

Straight tip needles feature a straight barrel with a flat-cut opening perpendicular to the needle axis. These nozzles are simple, inexpensive, and widely available in various gauge sizes. They provide adequate flow control for medium to thick viscosity inks. However, flat tip geometry can cause inconsistent bead formation at very small diameters. Blunt tips are suitable for applications where moderate precision is acceptable.

Standard Tapered

Standard tapered nozzles feature a conical tip that gradually narrows from the barrel diameter to the dispensing orifice. The taper angle typically ranges from 15 to 30 degrees. This geometry provides smoother flow transitions compared to blunt tips, reducing turbulence, and improving bead formation consistency. The tapered design reduces the risk of clogging by preventing material buildup at the exit. Standard tapered nozzles are manufactured using conventional drawing or grinding processes and represent a good balance between performance and cost.

Precision Tapered

Precision tapered nozzles feature engineered conical geometries with ultra-thin walls, typically 0.002 inches (50 µm) or less. These nozzles are manufactured through specialized processes such as deep drawing from flat sheet metal, resulting in highly polished interior surfaces and precisely controlled taper angles. The thin-wall construction allows for larger effective internal diameters compared to standard needles of the same gauge, reducing flow resistance. The optimized geometry minimizes pressure loss and provides superior flow characteristics, resulting in exceptional trace consistency and reduced clogging. The Voltera V-One PCB printer uses Subrex 225 µm precision thin-wall nozzles [24] as a reference for conductive ink dispensing applications. These nozzles represent the premium option for applications demanding maximum precision and consistency.

Luer Lock Standard

Luer lock nozzles use the standardized Luer lock connection system [25], allowing quick, tool-free replacement. They are available in both blunt and tapered configurations across a

wide range of gauge sizes. The standardized connection ensures compatibility with common syringe systems.

Custom Machined

Custom nozzles can be machined to specific internal geometries, tip angles, and orifice diameters optimized for applications. While they offer maximum flexibility and can be optimized for specific ink formulations, they require precision machining and are significantly more expensive than commercial options.

Nozzle Types Comparison and Selection

Table 17 - Nozzle Types Comparison Table

	Tip Geometry	Flow Control	Trace Consistency	Clogging Resistance	Typical Applications	Cost Range
Straight	Flat cut	Moderate	Good	Medium	General dispensing, medium viscosity fluids	Low
Standard Tapered	Gradual conical taper	Good	Very Good	Good	Precision dispensing adhesives, inks	Low-Medium
Precision Tapered	Conical with thin walls	Excellent	Excellent	Very Good	High-precision dispensing, conductive inks	Medium
Luer Lock Standard	Varies (blunt or tapered)	Varies	Good	Medium	Quick-change applications, general use	Low
Custom Machined	Application-specific	Variable	Variable	Variable	Specialized applications	High

The precision tapered thin-wall nozzle design was selected for the conductive ink dispensing system based on its superior flow characteristics, proven performance in conductive ink PCB printing applications, and optimal balance of precision and reliability.

The Voltera V-One, a commercial conductive ink PCB printer, successfully uses Subrex 225 µm precision tapered nozzles [24], providing a validated reference for this technology in the exact target application. This commercial implementation demonstrates that

precision tapered nozzles reliably produce PCB-quality conductive traces with consistent width and minimal defects. The proven track record in a commercial product significantly reduces implementation risk compared to untested nozzle configurations.

The engineered conical geometry with ultra-thin walls (approximately 0.002 inches or 50 µm) minimizes flow resistance and pressure loss compared to standard needle geometries. The gradual taper transitions smoothly from the barrel diameter to the dispensing orifice, reducing turbulence that can cause inconsistent flow or air bubble entrainment. The optimized geometry enables lower dispensing pressures to achieve the same flow rates, reducing stress on the ink reservoir and dispensing mechanism while improving control precision.

The precision tapered design significantly reduces clogging risk compared to blunt-tip needles. The smooth conical transition prevents sharp internal edges where conductive particles could accumulate and eventually block flow. Tapered tips maintain clear flow paths longer between cleaning cycles compared to blunt tips. For conductive ink containing silver or copper particles suspended in solvent carriers, this clogging resistance directly impacts operational reliability and reduces maintenance downtime.

Compared to standard tapered needles, the precision thin-wall design offers measurably better flow characteristics and reduced clogging, justifying the 2-3x cost premium. Compared to blunt-tip needles, the tapered geometry provides superior trace quality and consistency despite similar pricing for quality blunt tips from reputable manufacturers. The proven performance in commercial conductive ink printing applications (Voltera V-One) provides confidence that this nozzle technology will mee project requirements.

3.9.2 Nozzle Products

Subrex 150 µm Nozzles

The Subrex 150 µm Nozzle [26] is a high-precision dispensing nozzle rated at 35 gauge, making it one of the finer options in the lineup. Constructed from nickel silver, it offers excellent rigidity and thermal conductivity, which can help manage fluid viscosity during dispensing. The conical, precision tapered geometry is carefully designed to achieve maximum pressure reduction at a selected flow rate, while the rigid shape resists bending — a notable advantage over conventional straight medical needles. At $59.99 for a 4-pack, it is the most expensive per unit of the Subrex range, reflecting its ultra-fine orifice and the manufacturing precision required to produce it reliably. It is best suited for applications demanding the tightest deposit placement and highest spatial resolution.

Subrex 225 µm Nozzles

The Subrex 225 µm Nozzle [24] steps down to 33 gauge, offering a slightly larger orifice than the 150 µm model while retaining the same precision tapered design and nickel silver construction. This middle-ground sizing makes it a versatile choice for applications where extremely fine deposits are needed but the ultra-tight tolerances of the 150 µm tip are not strictly required. The conical geometry is engineered to minimize the volume of fluid retained ahead of the luer taper, and pressure is reduced by approximately three times at an

equivalent flow rate compared to straight needle designs. Priced at $49.99 for a 4-pack, it offers a slight cost saving over the 150 µm variant and represents a practical balance between precision and ease of flow for moderately viscous fluids.

Subrex 230 µm Disposable Nozzles

The Subrex 230 µm Disposable Nozzle [27] is a 32 gauge precision tapered tip, distinguished from the other Subrex options by its polypropylene construction rather than nickel silver. This material choice makes it significantly more affordable at $24.99 for a pack of 25 and positions it as a cost-effective solution for high-volume or single-use applications where nozzle replacement is frequent. The disposable nature eliminates the need for cleaning between uses, reducing downtime and the risk of cross-contamination. Subrex nozzles are designed for robotic and automated dispensing processes, featuring thin walls that enable a larger inside diameter for a given gauge size, supporting cleaner fluid breakoff and improved speed and accuracy. The 230 µm orifice is comparable in size to the 225 µm model, making this a practical drop-in alternative when disposability is prioritized over material durability.

Nordson EFD 250 µm ID Tip

The Nordson EFD 250 µm ID Tip [28] is a 25 gauge straight stainless steel dispensing tip, offering the largest orifice of the four products compared. Unlike the tapered Subrex nozzles, its straight geometry delivers a consistent, unobstructed flow path suited to a wide range of assembly fluids. Constructed from burr-free, polished, passivated stainless steel with a polypropylene SafetyLok hub, it is engineered for secure barrel attachment, drip-free dispensing, and flush mating of the hub to prevent trapped air — a common cause of dripping and inconsistent deposits. Tips are manufactured in silicone-free facilities and certified for industrial use, with color-coded hubs for easy gauge identification and clear packaging for inventory control and traceability. At $39.99 for a 4-pack, it sits in the mid-price range and is a strong choice for applications requiring reliable, repeatable deposits with broader flow rates than the finer Subrex options.

Nozzle Product Comparison and Selection

Table 18 - Nozzle Products Comparison Table

	Type	Gauge/Size	Material	Cost per Unit
Subrex 150 µm Nozzles	Precision Tapered	35G	Nickel Silver	$59.99 / 4 pack
Subrex 225 µm Nozzles	Precision Tapered	33G	Nickel Silver	$49.99 / 4 pack
Subrex 230 µm Disposable Nozzles	Precision Tapered	32G	Polypropylene	$24.99 / 25 pack

Nordson EFD 250 µm ID Tip	Straight	25G	Stainless Steel	$39.99 / 4 pack

The precision tapered thin-wall nozzle design was selected based on its superior flow characteristics and proven performance in conductive ink PCB printing applications. The Voltera V-One, a commercial conductive ink PCB printer, successfully uses Subrex 225 µm precision thin-wall nozzles [24], providing a validated reference for this technology. The engineered conical geometry with thin walls (approximately 0.002 inches) minimizes flow resistance and pressure loss, enabling consistent material deposition. The highly polished interior surface reduces the risk of clogging from conductive particles in the ink. The 225 µm (8.86 mil) internal diameter aligns well with the project target trace width of 12-16 mils, as deposited traces are typically 1.2 to 1.8 times the nozzle diameter. While precision thin-wall nozzles cost more than standard blunt or tapered needles, the improved consistency and reduced clogging risk justify the additional expense for achieving reliable trace quality in a research and prototyping context.

3.10 Camera Selection

3.10.1 Photography Overview

To select a camera, we prioritized finding a camera that would provide a clear image of the printed traces, with distinctions preferably being made down to a mil. We also looked for cameras with less lens distortion and vignetting, so we can accurately compare it to the schematic. Additionally, other highly preferrable characteristics we looked for are greater per-capture coverage and higher resolution. We also considered what working distance is possible for us to work with. Other minor factors also include the cable needed to connect the camera to the single-board computer (SBC) and the pairing of the lens and camera optically and mechanically.

More technically, these desired characteristics correspond to certain optical characteristics of the cameras. Obtaining a clear image can be achieved with a larger magnification. Magnification is the ratio of the apparent of an object in an image as opposed to its real size, and depth of field is the area that appears in focus in the image [29]. Lens distortion is a common observed phenomenon (such as in fish-eye lenses) which can be defined as that a lens failing to represent straight lines from a real object as straight lines in resulting image [30]. Vignetting is the reduction in image brightness towards the corners compared to the center [31]. Increasing per-capture coverage can be achieved with increased field of view. Field-of-view is how much a lens can capture in a single view, which can be measured with an angle [32]. The resolution of a camera generally relies on the number of pixels that its complementary metal-oxide-semiconductor (CMOS) sensor has. The CMOS sensor is the sensor that captures the light that is focused by the lens onto it and converts that light to an electrical output, which is converted to a digital value. For example, cameras need about 8.3 million pixels, or 8.3 megapixels (MP), to achieve true 4K recording resolution, and a 2 MP camera can achieve 1080p Full High-Definition recording [33]. Working distance is the distance between a lens and the subject when the subject is in focus,

so an increased working distance is preferrable to improve lighting and also prevent collision with the ink [34].

3.10.2 Camera Technologies

To fit these requirements, we considered two camera technologies, both of which rely on the camera taking multiple shots over the area of the board. An overhead camera that captures the entire 200 mm by 200 mm area could not reasonably capture traces that are mere fractions of a millimeter without an extremely high resolution. A 200 mm by 200 mm area is approximately 8000 mils by 8000 mils, so to capture every individual mil as a pixel, a 64 MP (8000 pixel by 8000 pixel) camera would be needed. This is expensive to obtain, with the cheapest possible option being $59.99 [35]. To construct a full picture, we would need to capture multiple photos over different parts of the board and then "stitch" them together into a composite image. This would involve greater software overhead but saves cost to achieve the same resolution. Additionally, the ability to mechanically move the camera comes at little cost because of the nature of the printer to precisely move a tip. Therefore, the two technologies we have available for taking multiple shots are macro photography and photomicrography.

Macro Photography

Macro photography is photography where pictures depict objects at life-size or larger. In other words, it is the capture of objects at a 1x magnification ratio or larger. Generally, the upper limit for such magnification is 5x, where higher magnification is left to photomicrography (discussed in the next section). Although macro photography may seem like photomicrography by both having some magnification, macro photography is rather considered extreme close-up photography, relying on the closeness of the object to the lens to "magnify" it rather than relying on a lens with inherent magnification. Regular cameras will come out of focus if brought too close to an object [36]. While the closeness is necessary for magnification, it may cause the camera to smudge the ink.

Lenses and cameras that perform macro photography are referred to as "macro lenses" and "macro cameras", respectively. Macro cameras have become quite popular for phones in recent years, featuring in most major iPhones since the iPhone 13 Pro [37]. This availability has been advantageous for early testing, proving macro cameras can be used as a means of capture.

Unfortunately, there are no dedicated macro cameras sold for single-board computers like the Raspberry Pi, nor are there any macro lenses sold for modular cameras offered for single-board computers. We could not find any macro cameras with a USB connector either. Instead, a camera and lens would have to be chosen separately and fitted together, which does give more freedom in the choice of camera and lens but involves more mechanical work. Similarly, there is no built-in lighting, which would take some additional time to design correctly and cost to install. Macro photography can be very sensitive to poor lighting.

Approximating the cost of a camera and lens combination, we have multiple choices. For the camera, there are specialized single-board computer cameras, which we will take the Raspberry Pi Camera Module 3 as the representative, and general USB web cameras, which we will take the Logitech Brio 100 Webcam as the representative.

The Raspberry Pi Camera Module 3 is a common camera for embedded electronics that has a 12 MP CMOS sensor. While these cameras are common in use, this camera uses a Camera Serial Interface (CSI) connector that is somewhat fragile because the ribbon cable is simply a flexible printed circuit. Using a CSI connector also limits the macro camera to single-board computers that have a corresponding CSI connector. For the best price, it costs $25 through Digikey. Other similar cameras only seem to be more expensive [38].

Looking at web cameras as an alternative, the Logitech Brio 100 Webcam provides six times less resolution, having a 2 MP (1920 by 1080 image resolution) CMOS sensor for a more expensive price of $28. Other web cameras with the same or higher resolution are only more expensive. Additionally, autofocusing, which seems to be nearly universal on web cameras, may cause issues with fine-tuning the camera to be always focused. However, the USB-A connector is far less fragile than the CSI connector that specialized cameras have [39].

As for the macro lens, we searched among macro lenses usually made to be attached to phones since these are the most reasonably priced. The cheapest macro lens is available for $29.99 in a set with other lenses, and the most expensive but reasonable macro lens is available for $39.99 by itself. For the cheapest lens, it provides a field-of-view of 78° and a single working distance of 1/2 inch or approximately 1.27 cm, whereas the most expensive lens considered provides a field-of-view of 140° and working distance range of 1.18 inches to 3.54 inches (approximately 3 to 9 cm). Unfortunately, these lenses lack specification on other optical characteristics such as distortion but generally seem to be reliable in producing extreme close-up shots. They also seem to only mount to phones with the use of a clip, which does not appear mechanically stable [40, 41]. Coming up with a mount for the lens onto the camera would be time-consuming and inconvenient, and if it is done incorrectly, could risk losing an accurate image.

With the camera ranging from approximately $25 to $28 in cost and the macro lens ranging from about $30 to $40, the total expected cost range of a camera and lens combination is approximately $55 to $68 depending on the camera and lens chosen.

Photomicrography

Photomicrography is essentially performing photography through a microscope. As with regular microscopes, microscopes capable of photomicrography are capable of magnifying by 10 times or greater [42]. However, with higher magnification, there is a smaller field of view offered. For the microscopes found for our purposes, the field of view is as low as 45° or as high as 178°. They often sit at a moderate field-of-view at 120° also.

All microscopes found lack autofocus, which may increase frustration in adjusting the focus when searching for a workable height. But at the same time, manual focus may be

beneficial to us once a height is set as the focus will be also known and set. Additionally, microscopes have a working distance of 0.3 to 6 cm, giving more forgiveness to the ability to focus on the object.

For all these microscopes, the camera and lens are sold and fitted together permanently. As a result, there is less customization. For example, there are no microscopes available that have cameras with 12 MP CMOS sensors for extremely high resolution. Also, we are constrained to use the USB connector that the microscope uses rather than possibly using a higher-speed cable. But the advantage of this package is that there is more security in that the lens and camera were made for each other and work together properly as a system for capturing quality pictures. Being restrained to a USB connector gives the advantage of being able to connect to almost any single-board connector since most microscopes offer the ability for the USB connector to be changed between USB-A, USB-C, and micro-USB. Additionally, all these microscopes come with built-in ring lighting, which is important to obtaining a clear picture.

Photomicrography is perhaps the cheapest technology available. Lower-end microscopes with 2 MP CMOS sensors are sold for as low as $20, whereas higher-end microscopes with 8 MP CMOS sensors capable of 4K capture are sold for up to $40. A mid-range microscope capable of 2K capture is also available for about $28 [43, 44, 45, 46, 47, 48, 49, 50].

In terms of stitching, photomicrography may pose distortion and vignetting problems. Distortion may lead to less of the image being usable because the distortion at the edges may be so great that it would create large inaccuracies at the edge of two individual captures in the composite image. Edge inaccuracies may cause the computer to think there are opens or shorts in traces that are not there [51]. Vignetting would cause a good portion of the image to be unusable since extreme dark regions may cause the portions of the image to be misinterpreted as traces when they are not, depending on the vision technique used. Contrast generally needs to be maximized, which is done with homogeneous lighting.

Camera Technology Comparison and Selection

Table 19 - Camera Comparison and Selection

	Macro Photography	Photomicrography
Magnification	1x to 5x	10x or greater
Field-of-view	78° to 140°	45° to 178°
Autofocus	Depends	No
Working Distance	1 to 9 cm	0.3 to 6 cm
Camera and Lens Sold and Fitted Together	No	Yes

CMOS Sensor	12 MP CSI connector camera for $25 or 2 MP webcam for $28	2 MP, 4 MP, 8 MP
Camera Connector	USB-A or CSI connector	USB-A, -C, and micro
Built-in Lighting	No	Yes
Geometric Distortion	"Lower"	"Higher"
Vignetting	No	Yes
Cost	$55 to $68	$20 to $40

We chose photomicrography over macro photography for its superior price and convenience of use. Macro photography has several technical advantages. Macro lenses have a generally greater field-of-view and working distance range to ease use when trying to capture a large area while maintaining focus. Macro cameras are also generally considered to have less geometric distortion and vignetting, which is less risky to the accuracy of the composite images that need to be made from individual captures.

But these technical advantages do not outweigh the simple cost and inconvenience of setting up a macro camera. The cheapest macro camera combination found is more expensive (at $55) than the most expensive microscope camera (priced at $40). The field-of-view and working distance of microscope cameras are also still fair and workable even if possibly not as high as the macro cameras. Distortion and vignetting can also often be handled after capture with image processing, albeit it would take time to create the proper filter. While the largest CMOS sensor size of the microscope cameras is smaller than the largest CMOS sensor of a macro camera setup (8 MP versus 12 MP), this difference is not important since an 8 MP camera can already support a very high quality 4K resolution image. The advantage that photomicrography has that finally made the decision to use it in favor of macro photography is that it is far more convenient to set up and use. All microscope cameras considered are already sold in a complete plug-and-play combination. All cameras use manual focus, so autofocus will not interfere with accurate tuning of the camera. The microscope camera connector is also always some form of USB connector, which guarantees the ability to connect with some board. There is also built-in lighting, which saves time on trying to set up a homogeneous lighting setup.

3.10.3 Microscope Camera Part Selection

In this section, we compare the various microscope cameras commercially available. For convenience, we will refer to these cameras by a shortened version of their name, given in parentheses in each section. Additionally, the same brand may offer multiple different microscopes. As such, we will refer to the lowest end microscopes offered as "regular" microscopes whereas the higher-end microscopes will have a resolution name attached (e.g., 2K, 4K) as this is often the distinguishing characteristic of higher-end microscopes.

Skybasic Wireless Digital Microscope

The Skybasic Wireless Digital Microscope (which we will refer to as the Skybasic Microscope) is a microscope camera with a 2 MP CMOS sensor, allowing for a 1920 by 1080 pixel maximum resolution. However, this resolution is only available on phones, with PCs only being able to receive a low-end 1280 by 720 pixel resolution. This microscope is compatible with MacOS, Windows, Android, and iOS. The lack of noted compatibility with Linux-based operating systems may cause issues with the operating system selection for the single-board computer. In terms of optics, the field of view is a narrow 45°. But the microscope comes with built-in ring lighting, which should balance the lighting in the center of the microscope's view. The microscope costs $29.99.

The microscope offers both wireless and wired connectivity. The wireless connectivity is through Wi-Fi, where the microscope acts as a wireless access point for phones (or other Wi-Fi enabled devices) to connect to it as if it is a wireless router. This is somewhat limiting since this essentially disallows the Wi-Fi chip on the single-board computer, but the computer still can achieve wireless capability through the microcontroller regardless. The wired connectivity is ambiguously labelled as being through "USB", which may be an issue if the type of USB connector is not available on the single-board computer chosen.

Other hardware features include a rechargeable battery, power button, picture capture button, and a notch-based mounting mechanism. The rechargeable battery is not necessary since the camera will always have a source of power. Instead, the battery is notable because it may pose a fire risk by overcharging, which may mean we would have to spend time to remove this battery. The power button and picture capture also may cause issues. If the microscope requires the power button to be pressed and cannot immediately turn on with the rest of the system, the camera would need to be modified to not depend on the power button and just start when it receives power. Similarly, it would be preferable if the capture was performed using software instead of needing a button to signal capture. The mounting mechanism is a notch, which is useful because it allows for a ring to tightly fit around microscope and support the microscope with both tension and gravity [50].

Plugable USB Digital Microscope

The Plugable USB Digital Microscope (which we will refer to as the Plugable Microscope) is a microscope camera with a 2 MP sensor, allowing for a 1920 by 1080 pixel resolution. This microscope is compatible with a wide range of operating systems, including Linux, MacOS, Windows, Chrome OS, iPadOS (but not iOS), and Android. The field of view is narrow at 45°. Ring lighting is provided, which is highly convenient. However, the microscope is the costliest of those researched, being priced at $59.95.

The microscope only offers wired connectivity through USB-A and USB-C. There should not be an issue connecting with the single-board computer we select because single-board computers generally come with at least a USB-A port.

As for other hardware features, this microscope does not have a rechargeable battery, power button, picture capture button, or notch for mounting. It seems the microscope purely relies on a wired power connection through a USB connector, and it likely comes

on automatically without the need to press a power button. This is convenient because the microscope will immediately come on with the system. The picture capture button is also absent, meaning the capture is likely implemented in software and can be more easily achieved. While these are good conveniences, the microscope does not have a notch, which means mounting would likely purely rely on tension or some form of adhesive to keep the camera in place [49].

Jiusion WiFi USB Digital Handheld Microscope

The Jiusion WiFi USB Digital Handheld Microscope (which we will refer to as the Jiusion 4K Microscope) is a microscope camera with a high-resolution 8 MP CMOS sensor. This is the highest resolution found, allowing for a 3840 by 2160 (4K) pixel resolution. This microscope is compatible with the greatest number of operating systems, including Linux, MacOS, Windows, Chrome OS, iOS, iPadOS, and Android. The field-of-view is moderate at 120°, and there is also ring lighting provided. The price of the microscope is a moderately high $36.99.

The microscope is capable of both wireless and wired connectivity. Wireless connectivity is achieved through Wi-Fi in a similar way that the Skybasic Microscope does it, which again somewhat limits the selected single-board computer's wireless capabilities. The wired connection is also again ambiguously described as "USB", but it appears to come with a micro-USB to USB-A adapter, which should mean there is no issue for connectivity with a single-board computer.

For hardware features, the microscope comes with a rechargeable battery and a combined power and picture capture button, but it does not have a notch for mounting and appears to rely purely on tension instead. Since the power and picture capture buttons are being combined as one button, it may be more complicated trying to make the camera turn on with the rest of the system correctly. For example, wiring the on button to be closed at all times may cause a constant burst of capture. This makes the microscope the least convenient of all microscopes considered in terms of additional hardware features because of possible battery dangers, hardware complexity in navigating around the combined picture and power buttons, and mechanical instability because of its reliance on tension only [47].

Jiusion 40 to 1000x Magnification Endoscope

The Jiusion 40 to 1000x Magnification Endoscope is, despite its naming, a microscope camera that is compatible with all major desktop operating systems (Linux, MacOS, and Windows) and Chrome OS (as such, we will refer to it as the Jiusion Regular Microscope). The CMOS sensor and image resolution are not listed, which may be an issue if the resolution is too low. The field of view is a moderate 120°, and ring lighting is available. The price is low at $21.99, which may make it worth considering if budget is tight enough.

The microscope can only connect by wire, with USB-A, USB-C, and micro-USB as the available options. Since these are the most common USB ports for computers, there should be little issue establishing a connection to the single-board computer.

In terms of hardware parts, the microscope has a picture button and notch mounting mechanism, but it does not have a rechargeable battery or power button. This makes the microscope rather convenient since the only possible issue is the picture button [52].

Cainda Digital Microscope

The Cainda Digital Microscope (Cainda Microscope) is a microscope camera that is compatible with all major desktop operating systems (Linux, MacOS, and Windows) along with Chrome OS and Android. The CMOS sensor and image resolution are unspecified, which poses a potential issue if the resolution is too low. The field of view is a narrow 45°, and it is unknown if ring lighting is available. Despite all these missing characteristics, the microscope is still notable for having the lowest price of all microscopes at $19.99. If budget is extremely tight, this microscope will be considered.

The microscope can only connect by wire, but it comes packaged with all common types of USB connector: USB-A, USB-C, and micro-USB. Connectivity should not be an issue as a result.

For hardware parts, it is not apparent if the camera has a power button or picture capture button. If the buttons are present, this may cause unexpected upset when trying to use the camera purely with software. No rechargeable battery is present, which is convenient. Additionally, the mounting mechanism is a notch [45].

Bysameyee USB Digital Microscope

The Bysameyee USB Digital Microscope (Bysameyee Regular Microscope) is a microscope camera that is compatible with all major desktop operating systems (Linux, MacOS, and Windows) and also Chrome OS and Android. Neither the CMOS sensor or the advertised resolution of the microscope are available, which may be a problem if the resolution is low. The field-of-view is unknown, which may pose vignetting issues if it is too small, but the microscope comes with ring lighting. While it is missing some important characteristics, it was taken into consideration for its low price at $21.99. If other microscopes are out of stock, then this one will be considered.

The microscope only connects by wire, which is sufficient for our application. All common types of USB connector are available: USB-A, USB-C, and micro-USB. The camera should be able to easily connect to the single-board computer then.

In terms of hardware features, the microscope has a picture capture button and a notch for mounting. The picture capture button may interfere with the program flow of the machine, but the notch is convenient for mounting more securely. There are no power button and rechargeable battery, which is convenient [44].

Bysameyee 4K Wireless Digital Microscope

The Bysameyee 4K Wireless Digital Microscope (Bysameyee 4K Microscope) is a microscope camera with an 8 MP CMOS sensor. It is able to achieve a 4K resolution, which is the highest resolution available among these microscopes. The camera is compatible

with the greatest number of operating systems, including Linux, MacOS, Windows, Chrome OS, iOS, iPadOS, and Android. The field-of-view is a narrow 45°, but lighting is provided. The microscope costs a high $39.99. This price may be worthwhile if the production quality is greater.

The microscope can connect both wirelessly and by wire. The wireless connectivity is ambiguously indicated as simply "wireless" rather than as any specific protocol like Wi-Fi or Bluetooth. If it is Wi-Fi, it is likely that it acts as a wireless access point like the other wireless microscopes, posing the same advantages and issues. If it is another protocol, there may be a larger issue. For example, it may be an issue with Bluetooth if the single-board computer we are using lacks Bluetooth capability. A Bluetooth adapter would have to be bought, adding to the cost. On the other hand, connecting to Bluetooth instead of Wi-Fi would keep the Wi-Fi chip on the single-board computer free if needed.

In terms of the hardware parts, the camera has a rechargeable battery, power button, picture capture button, and tension-dependent mounting mechanism. The rechargeable battery may be a fire hazard because the camera will always be plugged in to a power source (albeit only being provided power when the machine is on). The picture capture button and power buttons may prevent software-based capture and automatic power-on. Tension is the method of mounting the microscope, which can be prone to slipping due to gravity. This is the least convenient combination of hardware features [43].

Keemika USB Digital Microscope

The Keemika USB Digital Microscope (Keemika Microscope) is a microscope camera with a 2 MP camera with a claimed pixel resolution of 1920 by 1440 pixels, a nonstandard resolution. This resolution may use upscaling since 2 MP is only capable of 1920 by 1080 pixels at most ($1920 \times 1080 \approx 2$ million pixels), which may pose an issue for getting an accurate and true image of the PCB. This microscope is only compatible with the major mobile operating systems: iOS and Android. This may pose a major issue as it does not include Linux, and it may require some form of translation to be able to communicate with a preferable Linux operating system instead. However, the field-of-view is 178°, which is extremely wide and the widest of all microscope cameras considered. This breadth of sight might be extremely useful to capturing a wide area in a single capture. The microscope also comes with lighting, but it may not provide sufficiently homogeneous lighting for the wide field-of-view. The microscope costs $23.47, which is low for the possible resolution and field-of-view advantages.

The microscope only offers wired connectivity, and it provides connectors that have been generally used by mobile devices rather than desktop computers: Apple's Lightning cable, USB-C, and micro-USB. The lack of USB-A may pose an issue. Single-board computers may not have USB-C or micro-USB capabilities, and Apple's Lightning cable is generally exclusive to Apple products.

For hardware features, there is a notch for mounting and a picture capture button for hardware-based capture. The notch is convenient for mounting, but the picture capture button may interfere with software capture. There is no rechargeable battery, increasing

safety, or power button, which ensures the camera will come on with power immediately [48].

Jiusion 2K HD 2560x1440P USB Digital Microscope

The Jiusion 2K HD 2560x1440P USB Digital Microscope (Jiusion 2K Microscope) is a microscope camera with a 2560 by 1440 pixel resolution (informally known as a 2K resolution and formally known as Quad High Definition or QHD), suggesting an approximately 4 MP CMOS sensor. This microscope is compatible with all major desktop operating systems (Linux, MacOS, and Windows) and Android. The field-of-view is a moderate 120°, and the microscope comes with ring lighting. The microscope is priced moderately at $27.99, which is fair for the features it provides.

The microscope can only communicate by wire, with USB-A, USB-C, and micro-USB connections available. This is sufficient for connectivity.

For hardware features, there is a notch for mounting and a picture capture button, but there is no power button or rechargeable battery. This is mostly convenient except for the picture capture button, which could intervene with performing purely software-based capture [46].

Microscope Camera Part Comparison and Selection

Table 20 - Microscope Camera Comparison Table 1

	Skybasic Wireless Digital Microscope	Plugable USB Digital Microscope	Jiusion WiFi USB Digital Handheld Microscope	Jiusion 40 to 1000x Magnification Endoscope	Cainda Digital Microscope
Rechargeable Battery	No	No	Yes	No	No
Field-of-view	45°	45°	120°	120°	45°
Connector(s)	Wi-Fi (phone), "USB" (PC)	USB-A and -C	Wi-Fi (phone), "USB" (PC)	USB-A, -C, and micro	USB-A, -C, and micro
Image Resolution	1920 by 1080 (phone), 1280 by 720 (PC)	1920 by 1080	3840 by 2160	Unknown	Unknown
CMOS Sensor	2 MP	2 MP	8 MP	Unknown	Unknown

Power Button	Yes	No	Yes	No	Unknown
Picture Button	Yes	No	Yes	Yes	Unknown
Mounting Mechanism	Notch	Tension	Tension	Notch	Notch
Lighting	Yes	Yes	Yes	Yes	Unknown
Operating System Compatibility	MacOS, Windows, Android iOS	Linux, MacOS, Windows, Chrome OS, iPadOS, Android	Linux, MacOS, Windows, Chrome OS, iOS, iPadOS, Android	Linux, MacOS, Windows, Chrome OS	Linux, MacOS, Windows, Chrome OS, Android
Cost	$29.99	$59.95	$36.99	$21.99	$19.99

Table 21 - Microscope Camera Comparison Table 2

	Bysameyee USB Digital Microscope	Bysameyee 4K Wireless Digital Microscope	Keemika USB Digital Microscope	Jiusion 2K HD 2560x1440P USB Digital Microscope
Rechargeable Battery	No	Yes	No	No
Field-of-view	Unknown	45°	178°	120°
Connector(s)	USB-A, -C, and micro	"Wireless", "USB"	USB-C and micro, Apple's Lightning cable	USB-A, -C, and micro
Image Resolution	Unknown	3840 by 2160	1920 by 1440	2560 by 1440
CMOS Sensor	Unknown	8 MP	2 MP	4 MP
Power Button	No	Yes	No	No
Picture Button	Yes	Yes	Yes	Yes

Mounting Mechanism	Notch	Tension	Notch	Notch
Lighting	Yes	Yes	Yes	Yes
Operating System Compatibility	Linux, MacOS, Windows, Chrome OS, Android	Linux, MacOS, Windows, Chrome OS, iOS, iPadOS, Android	iOS, Android	Linux, MacOS, Windows, Android
Cost	$21.99	$39.99	$23.47	$27.99

We chose the Jiusion 2K Microscope over the others because it is a fair midrange microscope with a high performance for its cost. To perform the comparison, microscopes were both compared by category (low-end, midrange, and high-end) and individually.

Low-end microscopes are those priced between $19.99 and $21.99, making up the bottom three microscopes considered. This category includes the Jiusion Regular Microscope, Cainda Microscope, and Bysameyee Regular Microscope. These microscopes lack important details about their specification, particularly their image resolution and CMOS sensor size. The Cainda Microscope, which is the least expensive microscope of all those considered at $19.99, lacks details on whether it even has basic hardware features, such as ring lighting or buttons for powering on the device or capturing pictures. The other two microscope cameras show to be rather convenient in terms of these hardware features. But for the most part, these microscopes were only considered because of their sheerly low cost. And given that we are not that tight on budget and that the chosen microscope is much more feature-rich for only six or eight dollars more and features, we decided not to choose any of these microscopes.

The midrange microscopes are those priced between $23.47 and $29.99, making up the middle three microscopes considered. This category includes the Keemika Microscope, Jiusion 2K Microscope (the one we chose), and Skybasic Microscope. These microscopes are more feature-rich while costing not much more than the low-end microscopes. The Keemika and Jiusion 2K microscopes offer higher resolutions than 1080p, and the Keemika offers a high claimed field-of-view of 178°. The Skybasic Microscope offers Wi-Fi connectivity, and it is the cheapest microscope of all those considered to do so. However, the Keemika and Skybasic microscopes were ruled out in favor of the Jiusion 2K Microscope. While the Keemika claims a higher image resolution of 1920 by 1440 pixels, its actual CMOS sensor is only 2 MP, which supports a true highest resolution of 1920 by 1080 pixels. It may be that the image resolution is upscaled from this resolution to 1920 by 1440 pixels. Additionally, the microscope is only made to be compatible with mobile operating systems, which is extremely limiting of our operating system and corresponding software choices for our chosen single-board computer. The Skybasic Microscope was also ruled out because the features it offers for its costs were not worthwhile. The main distinguishing feature, Wi-Fi connectivity, may not be within our specified speed of connection. It is also unnecessary when the wired connection is likely sufficient. With no

other advantages in terms of resolution or convenience and being the most expensive of the midrange microscopes at $29.99, it was ruled out. This left the Jiusion 2K Microscope as the one chosen from these three.

The high-end microscopes are those priced between $36.99 and $59.95, making up the top three microscopes considered. This category includes the Jiusion 4K Microscope, Bysameyee 4K Microscope, and Plugable Microscope. The main characteristics of these are the addition of wireless capabilities, a broad range of compatible operating systems, and an 8 MP CMOS sensor capable of 4K resolution. However, the Plugable Microscope was found to have neither of these advantages at a much higher cost. Its main advantage were the convenience of hardware features, but it was discarded early on. For the other two that do have these characteristics, wireless capability is not really necessary if the wireless connection functions perfectly well, and it may fall outside of our needed specification for connectivity. However, the greatly increased resolution may be advantageous. Since a price increase of nine or twelve dollars over the Jiusion 2K Microscope for 4K resolution was justifiable by itself, we considered other factors to see whether to buy the higher-quality microscopes. Considering hardware features, the high-end microscopes are less convenient in having no notch to mount on. Additionally, they have a rechargeable battery, which is unnecessary and possibly dangerous because of the risk of overcharging as the microscope will be plugged in all the time. As such, we decided to stay with the Jiusion 2K Microscope as our final decision.

3.11 Single Board Computer Selection

3.11.1 Single-Board Computer Technology Selection

Raspberry Pi

The Raspberry Pi is a popular single-board computer technology with an active community and support. All models have 4-core CPUs that are clocked between 1.4 to 2.4 GHz depending on the specific model. The RAM is customizable, with 1, 2, 4, 8, and 16 GB available. However, 16 GB of RAM is only available for the Raspberry Pi 5. For wireless connectivity, all boards offer Wi-Fi and Bluetooth/BLE. Wi-Fi can be run at 2.4 and 5 GHz depending on whether we need a higher range or faster data rate. Depending on the device, either Bluetooth 4.2 or 5.0 is available. The Raspberry Pi offers USB-A ports for data and a USB-C port but for power only. For storage, there is a microSD card slot available on all Raspberry Pi models, but the Raspberry Pi 5 also has a PCI express connector for the ability to connect an NVMe SSD. The price for Raspberry Pi technology varies widely, with a range of $35 to $205 [53, 54, 55].

Orange Pi

The Orange Pi is a single-board computer technology that is made with the intent of being cost-effective. The Orange Pi is observably powerful; all models considered have 8- or 12-core CPUs clocked between 1.8 and 2.8 depending on the specific model. The RAM can be customized to be 4, 8, 16, 32, or 64 GB depending on the model, with smaller sizes only be available for lower-end models and larger sizes only being available for higher-end models. For wireless connectivity, Wi-Fi is available on all models considered but the

presence of Bluetooth depends on the model. Wi-Fi can be run at 2.4, 5, and even 6 GHz for whether we need a higher range or faster data rate; however, the 6 GHz frequency is only available on higher-end devices. If Bluetooth is available, then it is available as either Bluetooth 5.3 and 5.4 with Bluetooth Low Energy. The Orange Pi offers USB-A ports for data and a USB-C port but for power only. For storage, many methods of storage are available (albeit which are available depends on the model). Storage methods available include microSD card, NVMe SSD, eMMC Flash, SPI Flash, and a UFS Module. The price for Orange Pi technology varies widely, with the models considered being priced as little as $65.99 to as high as $211.99 [56, 57, 58].

Beagleboard

BeagleBoard is a single-board computer technology developed to assist education in collaboration around open-source embedded software and hardware. The models considered have 1- or 2-core CPUs that are clocked between 1 and 1.4 GHz. The RAM is fixed for each model, with each one considered having either 2 or 4 GB of RAM. For wireless connectivity, some models have Wi-Fi and Bluetooth/BLE. When Wi-Fi is available, it can be run at 2.4 or 5 GHz. When Bluetooth is available, it may be Bluetooth 5.4 with Bluetooth Low-Energy or just BLE by itself. BeagleBoard offers USB-A ports for data on all models, and it offers mini-USB for power only on some models and USB-C for power and data on other models. For storage, the ability to insert a microSD card is available on one model, and a fixed onboard eMMC Flash has been found on other models. The price of BeagleBoard technology is low and does not vary widely, costing between $53.77 and $99.45 [59, 60, 61].

Single-Board Computer Technology Comparison and Selection

Table 22 - Single-Board Computer Technology Comparison Table

	Raspberry Pi	Orange Pi	BeagleBoard
CPU Speed	1.4 to 2.4 GHz	1.8 to 2.8 GHz	1 to 1.4 GHz
CPU Cores	4	8, 12	1, 2, 4
RAM	1, 2, 4, 8, or 16 GB	4, 8, 16, 32, 64 GB	2, 4 GB
Wi-Fi	Yes (2.4, 5 GHz)	Yes (2.4, 5, 6 GHz)	Depends (2.4, 5 GHz)
Bluetooth/Bluetooth Low Energy	Yes (Bluetooth 4.2, 5.0)	Depends (Bluetooth 5.3, 5.4)	Depends (Bluetooth 5.4)
USB Types	USB-A, USB-C (power only)	USB-A, USB-C (power only)	USB-A, mini-USB (power only), USB-C (power and data)

Storage Media	microSD card, NVMe SSD	microSD card, NVMe SSD, eMMC Flash, SPI Flash, UFS Module	microSD card, eMMC Flash
Cost	$35 to $205	$65.99 to $211.99	$53.77 to $99.45

We selected Raspberry Pi as our final technology of choice because it fits our needs for a moderately powerful but still easy-to-use device. BeagleBoard technology was eliminated early because it was found to be underpowered compared to Raspberry Pi hardware that cost similar. Even some high-end Raspberry Pi hardware with far better specs cost less than the best BeagleBoard considered. For example, the Raspberry Pi 5 with 4 GB of RAM costs $85 at Digikey and has a 2.4 GHz 4-core processor, whereas the BeagleBoard BeaglePlay with a fixed 2 GB of RAM costs $99.45 at Digikey and has an 1.4 GHz 4-core processor. The Raspberry Pi 5 has more memory and a faster processor for a lesser cost.

Orange Pi technology was also eliminated despite how much more powerful and cost-effective it is than Raspberry Pi technology because it lacks popularity, support, and standardization. The Raspberry Pi community is large and includes support from those who make poplar Linux distributions. While the Orange Pi also supports various operating systems, it is harder to get support in installing these distributions. The makers of the Raspberry Pi technology are also more interested in standardizing its platform across different models to ensure consistency, whereas the Orange Pi is more focused on producing single-board computers for specialized applications [62]. We feel the ability to have consistent performance and the ability for it to just work is more important than maximizing performance for our application in our short development time. Ultimately, Raspberry Pi technology seemed best to quickly and sufficiently make a computer vision application.

3.11.2 Raspberry Pi Part Selection

Raspberry Pi 3 Model B+

The Raspberry Pi 3 Model B+ is a Raspberry Pi model with a 1.4 GHz 4-core CPU and only 1 GB of RAM. For wireless connectivity, the boards offers Wi-Fi and Bluetooth 4.2/BLE. Wi-Fi can be run at 2.4 and 5 GHz depending on whether we need a higher range or faster data rate. This model offers USB-A ports for data. For storage, there is only a microSD card slot available. The price of the Raspberry Pi 3 Model B+ is $40 [54, 63].

Raspberry Pi 4 Model B

The Raspberry Pi 4 is a Raspberry Pi model with a 1.8 GHz 4-core CPU. There are multiple RAM sizes available, including 1, 2, 4, or 8 GB. For wireless connectivity, the boards offers Wi-Fi and Bluetooth 5.0/BLE. Wi-Fi can be run at 2.4 and 5 GHz depending on whether we need a higher range or faster data rate. This model offers USB-A ports for data, and a USB-C port for power only. For storage, there is only a microSD card slot available. Depending on the amount of RAM chosen, the price of the Raspberry Pi 4 is between $35 and $115 [63, 55].

Raspberry Pi 5

The Raspberry Pi 5 is a Raspberry Pi model with a 2.4 GHz 4-core CPU. There are multiple RAM sizes available, including 1, 2, 4, 8, or even 16 GB, with 16 GB being exclusive to the Raspberry Pi 5. For wireless connectivity, the boards offers Wi-Fi and Bluetooth 5.0/BLE. Wi-Fi can be run at 2.4 and 5 GHz depending on whether we need a higher range or faster data rate. This model offers USB-A ports for data, and a USB-C port for power only. For storage, there is a microSD card slot available, and there is also a PCIe slot exclusive to the Raspberry Pi 5. Depending on the amount of RAM chosen, the price of the Raspberry Pi 5 is between $45 and $205 [63, 53].

Raspberry Pi Part Comparison and Selection

Table 23 - Raspberry Pi Part Comparison Table

	Raspberry Pi 3 Model B+	Raspberry Pi 4	Raspberry Pi 5
CPU Speed	1.4 GHz	1.8 GHz	2.4 GHz
RAM	1 GB	1, 2, 4, or 8 GB	1, 2, 4, 8, or 16 GB
Wi-Fi	Yes (2.4, 5 GHz)	Yes (2.4, 5 GHz)	Yes (2.4, 5 GHz)
Bluetooth/Bluetooth Low Energy	Yes (Bluetooth 4.2)	Yes (Bluetooth 5.0)	Yes (Bluetooth 5.0)
USB Types	USB-A	USB-A, USB-C (power only)	USB-A, USB-C (power only)
Storage Media	microSD card	microSD card	microSD card, NVMe SSD
Cost	$40	$35 to $115	$45 to $205

We selected the Raspberry Pi 5 with 4 GB of RAM because it struck a good balance between cost, performance, and having the new technology. For performance, we would like to have as fast of a processor as possible. The Raspberry Pi 4 offers a higher CPU clock speed and a lower cost for its 1 GB model than the Raspberry Pi 3 Model B+, so we eliminated the Raspberry Pi 3 Model B+ early on. It also lacks memory at a fixed 1 GB of RAM only, which is likely not sufficient for image storage. To show the importance of a large memory, we should consider the size of a single high-resolution image. At most, we are capturing the full 200 mm by 200 mm working area, which is approximately equal to 8000 mils by 8000 mils in area. Since we probably want at least 2 pixels per mil, we will have to store an 16000 pixel by 16000 pixel image, or in other words, a 256 million pixel image. If we are using full 24-bit (3-byte) color depth, this image will take up 768 million bytes or approximately 732 MB. Considering that the Raspberry Pi OS uses approximately 566 MB of RAM without any user programs running, the 4 GB Raspberry Pi 5 can

comfortably store approximately 4 images in memory with some remaining half gigabyte of memory for other programs. This is enough for both input and output images to be stored. As such, 4 GB should be sufficient for a Raspberry Pi. Comparing the Raspberry Pi 4 and 5 at 4 GB then, the Raspberry Pi 5 is only a $10 increase over the Raspberry Pi 4, which is highly worthwhile given the significantly increased clock speed and additional manner of storage.

3.12 Storage Devices

Storage devices enable the printer to access G-code files containing toolpath instructions for PCB fabrication. The storage system must provide adequate capacity for multiple design files, reliable data retention, convenient file transfer from computers or mobile devices, and compatibility with the microcontroller's communication interfaces. Users upload PCB Gerber files that are processed into G-code, which must be stored locally on the printer for execution. The storage device selection impacts user workflow, file management convenience, and system cost. Key selection criteria include storage capacity, read/write speed, physical interface compatibility, ease of file transfer, durability through repeated insertions/removals, and cost.

3.12.1 SD Card

The SD card implementation is being followed from an example provided online, this will be used as reference for our designs, but may not be our exact final output. Noting the SD card itself, it is a 9 pin device that will get slotted into our SD card connector that utilizes SPI [64]. This is broken out on the female side with these pin connectors above. This is commanded with SPI and an example implementation here. This is going to be the reference for the implementation laid out in our system. There are other memory technologies, but this is a simple one and is common amongst this class of machine. This device will allow us to store all of the G-code that will be utilized per ‘print’. This is broken out on the female side with these pin connectors above. This is commanded with SPI and an example implementation here. This is going to be my reference for the implementation laid out in our system. There are other memory technologies but this is a simple one and is common amongst this class of machine. This device will allow us to store all of the G-code that will be utilized per ‘print’.

3.12.2 MicroSD Card

MicroSD cards function identically to standard SD cards but in a smaller 15mm × 11mm × 1mm form factor. They use the same electrical interface (SPI or SDIO) and communication protocols. The smaller size enables more compact integration into printer electronics, reducing the physical footprint of the card slot. MicroSD cards are ubiquitous in smartphones, tablets, and action cameras, making card readers widely available. However, the smaller contact pads are more susceptible to contamination and wear from repeated insertions. The tiny form factor also increases the risk of losing the card during handling. Adapters enable microSD cards to fit standard SD card readers, providing compatibility with both form factors. MicroSD cards typically cost slightly less than equivalent-capacity SD cards.

3.12.3 USB Flash Drive

USB flash drives connect via standard USB Type-A connectors, communicating through USB protocols (USB 2.0 or 3.0). The microcontroller requires USB host capability to interface with flash drives, which is supported by some MCUs (ESP32, STM32 with USB OTG) or through USB host controller chips. Users transfer files by simply plugging the drive into a computer, copying files, and moving the drive to the printer's USB port. This workflow is familiar and convenient, requiring no separate card reader. USB 2.0 provides significantly faster transfer speeds (30+ MB/s) compared to SPI-mode SD cards (1-10 MB/s), though this is less critical for small G-code files. The USB connector's mechanical robustness better withstands repeated plugging cycles compared to SD card contacts. However, implementing USB host functionality in firmware is more complex than SD card SPI communication, and not all microcontrollers support USB host mode without additional hardware.

3.12.4 Internal Flash

Modern microcontrollers include internal flash memory (typically 4-16 MB) that can store files using filesystems like SPIFFS (SPI Flash File System) or LittleFS (Little File System). Files are uploaded to internal flash via Wi-Fi or Bluetooth from a connected device, eliminating physical media entirely. This approach provides the most compact and durable solution—no card slots, connectors, or removable media to fail. File access is very fast since storage is on the internal bus. However, capacity is limited compared to removable media, typically sufficient for only a few design files at once. Users cannot easily transfer files between printers or maintain backup libraries on physical media. The wireless upload dependency requires functioning Wi-Fi/Bluetooth and may be inconvenient in environments with network restrictions.

3.12.5 eMMC Module

eMMC (embedded MultiMediaCard) modules are soldered flash storage chips using the eMMC/SDIO interface. They provide high capacity (4-64GB) with very fast read/write speeds (50+ MB/s) and high reliability since there are no connectors to wear out. However, eMMC modules are permanently soldered to the PCB, making capacity upgrades impossible without replacing the module. File transfer must occur through wired (USB) or wireless (Wi-Fi) connections rather than removable media. This approach is common in smartphones and tablets but less common in maker equipment where removable storage provides flexibility. The higher cost and reduced user flexibility. The higher cost and reduced user flexibility make eMMC less attractive for prototypes and maker-oriented equipment.

3.12.6 Memory Storage Comparison and Selection

Table 24 - Memory Storage Comparison Table

Technology	Capacity	Interface	Transfer Method	Read Speed	Physical Durability	Cost

SD Card	4-512 GB	SPI/ SDIO	Card reader (PC/ phone)	Medium (SPI: 1-10 MB/s)	Medium (contact wear)	Low
MicroSD Card	4-512 GB	SPI/ SDIO	Card reader (PC/ phone)	Medium (SPI: 1-10 MB/s)	Medium-Low (small contacts)	Very Low
USB Flash Drive	8-256 GB	USB 2.0/30	Direct plug (PC)	High (USB 2.0: 30+ MB/s)	High (connector robust)	Low-Medium
Internal Flash	4-16 MB	Internal	Wi-Fi/ Bluetooth upload	Fast (internal bus)	Very High (no connectors)	Very Low (integrated)
eMMC Module	4-64 GB	SDIO/ eMMC	Soldered (Wi-Fi upload)	Very High (50+ MB/s)	Very High (soldered)	Medium

The SD card storage solution was selected based on its balance of capacity, ease of use, proven reliability in 3D printer applications, and straight forward firmware integration.

SD cards provide ample storage capacity—even a modest 4GB card stores thousands of G-code files, far exceeding practical requirements for a PCB printer where individual files are typically under 1 MB. The removable media approach enables convenient file transfer: users can remove the SD card, insert it into their computer's built-in or external card reader, drag-and-drop G-code files, and reinsert the card into the printer. This workflow requires no special software, drivers, or network configuration. The physical card also serves as a portable backup and enables easy file sharing between multiple printers if additional units are built.

The SPI interface is universally supported by microcontrollers and requires only four GPIO pins plus power and ground. The ESP32-WROOM-32 mainboard MCU natively supports SPI with hardware acceleration, simplifying firmware integration. SD card interfacing is extensively documented in the 3D firmware community, with proven implementations in Marlin [65], Repetier [66], and other open-source printer firmware. Example code and libraries (Arduino SD library, ESP32 SD_MMC library) provide reference implementations that accelerate development and reduce debugging time.

SD card slots are inexpensive ($0.50-2.00) and widely available from electronics distributors. The mechanical design is standardized, with numerous compatible card socket options for PCB mounting or panel mounting. The standard SD card's larger size compared

to microSD provides more robust contact pins that better tolerate repeated insertion cycles—important for a prototype system that will undergo numerous file updates during development and demonstration. While the card protrudes from the housing, proper mechanical design can position the slot in a protected location or add a cover to prevent accidental removal.

Compared to microSD cards, standard SD cards offer slightly better mechanical durability and easier handling, justifying the marginally larger slot size. Compared to USB flash drives, SD cards require simpler firmware implementation (SPI vs. USB host stack) and lower microcontroller overhead, though USB would provide faster transfer speeds that are unnecessary for small G-code files. Compared to internal flash storage with Wi-Fi upload, SD cards provide larger capacity and don't depend on wireless connectivity functioning correctly. The removable media approach also provides a backup mechanism—users can maintain multiple SD cards with different design libraries.

For a conductive ink printer project, the SD card approach provides proven reliability with minimal development risk. The extensive documentation and community support for SD card integration in printer firmware enables rapid implementation. The familiar user experience (remove card, copy files, reinsert card) requires no special training or software installation. At approximately $5-10 for a name-brand 8-32 GB card plus $1-2 for the socket, the SD card solution provides excellent value while meeting all storage requirements for the conductive ink printer.

3.13 Z-Height sensor

The Z-height sensor detects the distance between the dispensing nozzle and the PCB substrate surface, enabling automatic bed leveling and ensuring consistent nozzle height during printing. Maintaining proper nozzle-to-substrate spacing is critical for conductive ink deposition—excessive height causes poor adhesion and trace spreading, while insufficient clearance risks nozzle collision with the substrate or previously deposited material. The sensor must provide adequate sensing range to accommodate substrate thickness variations and initial positioning uncertainty, and sufficient resolution to detect height differences of 0.1mm or better. Key selection criteria include sensing range, resolution, response time, mounting requirements, and cost [67].

3.13.1 TOF Sensor

Time-of-flight (ToF) sensors emit modulated pulses of infrared light and measure the time required for reflected light to return to the sensor. The round-trip time directly corresponds to distance based on the speed of light. ToF sensors such as the VL53L0X or VL53L1X provide non-contact distance measurement across a relatively wide range (typically 30-400mm for the VL53L0X). Resolution ranges from 0.5mm to 1mm depending on the sensor model and distance. ToF sensors work with most materials regardless of conductivity, though highly reflective or absorptive surfaces may affect accuracy. Dark materials absorb more light, reducing signal strength, while mirror-like surfaces may deflect the beam away from the return path. The sensors communicate via I2C interface, simplifying integration with microcontrollers. Response times of 10-100ms are adequate

for the static measurement during bed leveling probing. ToF sensors require clear line-of-sight to the target surface and must be mounted with the sensing window unobstructed. Ambient light interference is minimal due to modulated signal detection. At 5-$15 per sensor, ToF devices provide good value for non-contact sensing applications.

3.13.2 Limit Switch

Mechanical limit switches provide simple binary contact detection—the switch closes when a probe tip touches the surface. These switches are commonly used in 3D printer auto-leveling systems where a spring-loaded probe extends below the nozzle. The printer slowly lowers the Z-axis until the probe contacts the build surface and triggers the switch, establishing the Z-zero position. Limit switches offer universal material compatibility since contact detection doesn't depend on material properties. The contact event is instantaneous with no measurement delay. However, switches provide only binary contact detection without measurement capability. They require mechanical actuation force which could mark soft substrates or shit loose PCBs. The probe mechanism adds mechanical complexity and a potential point of failure. Switches are extremely inexpensive ($0.50-2.00 each) and interface via simple digital input pins. The primary limitation is the lack of continuous distance measurement—switches only detect contact, not proximity.

3.13.3 Inductive sensor

Inductive proximity sensors detect conductive materials through electromagnetic induction. The sensor generates a high-frequency oscillating electromagnetic field from an internal coil. When conductive material (metals) enters the field, eddy currents form in the material, loading the oscillator circuit and changing its amplitude. Detection circuitry senses this change and outputs a signal indicating proximity. Inductive sensors provide sensing ranges typically from 1mm to 10mm depending on sensor size and target material. Resolution can reach 0.01-0.1mm with analog output sensors, providing precise distance measurement. Response times are very fast (<1ms), enabling dynamic measurements.

However, inductive sensors only detect conductive materials—they respond strongly to PCBs with copper traces but provide no signal from bare FR-4 substrate, polyimide, or ceramic without conductive surfaces. This selectivity can be advantageous (detecting only conductive traces) or limiting (unable to detect substrate itself). Inductive sensors are common in industrial automation for metal detection and positioning. They operate from 5-24V DC depending on model, requiring appropriate power supply. Digital (switching) output sensors cost $3-8, while analog output sensors with proportional distance measurement cost $8-15. The sensors are robust and reliable with no moving parts.

3.13.4 Capacitive Sensor

Capacitive proximity sensors detect objects by sensing changes in capacitance when materials enter the sensor's electric field. The sensor forms one plate of a capacitor, with the target object acting as the other plate. As the target approaches, capacitance increases, which the sensor detects and converts to an output signal. Unlike inductive sensors, capacitive sensors respond to most materials including plastics, glass, ceramics, and liquids,

not just conductors. This provides more universal material compatibility, making them more suitable for detecting various PCB substrate types.

Sensing ranges typically extend from 2mm to 20mm depending on target material dielectric properties and sensor size. Resolution is moderate (0.1-0.5mm), adequate for bed leveling but less precise than inductive sensors. Response times of 1-10ms are fast enough for static measurements. Capacitive sensors are sensitive to humidity, contamination, and nearby objects, requiring careful mounting and shielding. They cost $4-10 for basic switching sensors and $10-20 for analog output versions with distance measurement. The technology is proven in industrial level sensing and liquid detection applications.

3.13.5 Infrared Sensor

Infrared (IR) proximity sensors emit infrared light and detect reflected light intensity to estimate distance. Simple sensors use intensity-based ranging where brighter return signals indicate closer objects. More sophisticated sensors use triangulation, where a position-sensitive detector measures the angle of reflected light to calculate distance. Sensing ranges span 5mm to 80mm depending on sensor type. Resolution is moderate (1-5mm) suitable for coarse distance measurement but less precise than ToF or inductive sensors.

IR sensors work with most materials, but performance varies significantly with surface color and reflectivity. Dark surfaces absorb IR, reducing return signal and causing underestimation of distance. Shiny surfaces create specular reflections that may miss the detector, causing erratic readings. Ambient IR from sunlight or incandescent lighting can interfere with measurements. The sensors are inexpensive ($2-5) and simple to interface (analog or digital output), but the material-dependent variability limits precision for bed leveling applications. IR sensors are common in robotics for obstacle detection where approximate distances suffice.

3.13.6 Ultrasonic Sensor

Ultrasonic sensors emit high-frequency sound waves (typically 40kHz) and measure the time for echoes to return from target surfaces. Distance is calculated from the round-trip time and speed of sound(~343 m/s in air). Sensing ranges extend from 20mm to 400mm or more, suitable for coarse positioning but excessive for close-proximity bed leveling. Resolution is limited to 1-5mm, insufficient for precise nozzle height control. Response times of 50-200ms are relatively slow, adequate for static measurements but too slow for dynamic scanning. Ultrasonic sensors require hard, flat surfaces for reliable echo detection—soft or angled surfaces absorb sound or reflect it away from the detector. Temperature and humidity affect the speed of sound introducing measurement errors without compensation. The sensors cost $8-15 and require pulse-echo timing circuits or dedicated ultrasonic sensor modules. While common in robotics and automotive applications, ultrasonic sensors lack the resolution and reliability needed for precision bed leveling in PCB printing.

3.13.7 Z-Height Sensor Comparison and Selection

Table 25 – Z Height Sensor Comparison

Sensor	Sensing range	Resolution	Response Time	Mounting Complexity	Cost
ToF	10-400mm	0.5-1mm	Fast (10-100ms)	Medium	Medium ($5-15)
Limit Switch	Contact only	N/A (binary)	Instant (contact)	Low	Very Low ($0.50-2)
Inductive	1-10mm	0.01-0.1mm	Very Fast (<1ms)	Low-Medium	Low ($3-8)
Capacitive	2-20mm	0.1-0.5mm	Fast (1-10ms)	Medium	Low-Medium ($4-10)
IR	5-80mm	1-5mm	Fast (10-50ms)	Low-Medium	Low ($2-5)
Ultrasonic	20-400mm	1-5mm	Medium (50-200ms)	Medium	Medium ($8-15)

The limit switch was selected for Z-height sensing based on its simplicity, universal material compatibility, proven reliability in 3D printer applications, and extremely low cost.

Mechanical limit switches provide simple, robust contact detection that works with any substrate material regardless of conductivity, color, reflectivity, or dielectric properties. Unlike inductive sensors that only detect conductive materials or capacities sensors affected by material dielectric constants, a limit switch responds identically to copper-clad PCBs, bare FR-4 substrates, polyimide films, ceramic substrates, or any other material. This universal compatibility ensures the bed leveling system functions reliably across different substrate types without requiring sensor recalibration or parameter adjustments.

The contact detection event is instantaneous with no measurement delay or signal processing latency. When the spring-loaded prob touches the substrate surface, the switch contacts close immediately, providing a clean digital signal to the microcontroller. This eliminates concerns about sensor response time, ambient interference, or temperature drift that affects electronic sensors. The binary nature of switch operation simplifies firmware integration —the system simply monitors a digital input pin for the state change indicating contact.

Limit switches are proven reliable in 3D printer auto-leveling systems worldwide. The BLTouch, CR-Touch, and number DIY auto-leveling implementations use mechanical or electromechanical probes successfully across millions of 3D printers. Marlin firmware

[65]includes comprehensive support for mechanical probe integration, with configuration parameters for probe deployment, triggering logic, mesh bed leveling routines, and Z-offset compensation. The mature firmware support significantly reduces implementation risk and development time. Extensive community documentation, troubleshooting guides, and example configurations are readily available for mechanical probe systems.

The mechanical implementation is straightforward—a limit switch mounts to a bracket with a limit switch probe extending slightly below the nozzle height. The printer lowers the Z-axis slowly during probing until the probe contacts the substrate and triggers the switch, establishing the Z-zero reference point. The spring-loaded mechanism prevents excessive downward force that could damage the substrate or shift lightweight PCBs. Simple mechanical adjustment or firmware Z-offset configuration compensates for the probe length difference from the nozzle tip.

The primary limitation of limit switches—lack of continuous distance measurement—is acceptable for this application. The printer only needs to detect the substrate surface position during the initial bed leveling routine before printing begins, not continuously measure distance during printing. Once Z-zero is established through contact detection at multiple points to map the bed surface, the printer operates in open-loop Z-height control based on the leveling compensation mesh. Continuous distance sensing during printing is unnecessary since the mechanical system maintains repeatable positioning.

Compared to inductive sensors that only detect conductive surfaces, the limit switch's universal material compatibility provides greater flexibility for future experimentation with non-conductive substrates. Compared to ToF sensors with limited resolution (0.5-1mm) insufficient for precision leveling, the mechanical contact detection provides exact surface location. Compared to capacitive sensors sensitive to humidity and contamination, the limit switch operates reliably regardless of environmental conditions.

For a conductive ink printer project requiring reliable bed leveling with minimal cost and maximum material compatibility, the limit switch provides the optimal solution. The proven technology, extensive community support, simple integration, and universal material compatibility make the limit switch the lowest-risk choice. The cost saving compared to electronic sensors can be redirected toward other project components, improving the overall system capability within budget constraints.

3.14 Touchscreen Technologies and Parts

3.14.1 Touchscreen Technologies

There are two types of touchscreen technologies that are primarily used in consumer electronics, resistive and capacitive screens. Though there is a third type of touchscreen that is used for high contact areas. Surface acoustic waves or SAW screens that are used as a touch interface. These 3 different technologies have their own benefits but are being compared since this machine would most likely operate in a lab environment with many operators. These different screen types can affect ease of usability and reliability of the

interface operation. Resistive and capacitive touch are the most similar and are the most available.

Resistive

Resistive displays rely on an electrical characteristic that pressure can decrease the resistance of a material. This occurs within a resistive screen locally to where the screen is being 'touched', which allows the interface to operate. This allows the device to be used as long as there is pressure applied. Meaning the material contacting the screen does not dictate the operation of the screen. Our device is going to be used in a lab environment so there is low chance of accidental operation since not anyone will be in the room, nor clutter. This may even be helpful since there is a chance that someone operating in the lab will have gloves on. Though response time is a concern since many operations would occur on screen in the operation of the machine. This would be the process of selecting a print and starting the print. Also as wear occurs on the device the resistance becomes inconsistent and operate less reliably.

Capacitive

Capacitive displays use the principal of electrostatics in the screen. That a hand would change the electrostatic properties within the screen cause a current flow within the screen. This allows for much greater response time and a friendlier user experience. Though this limits the interfacing to anything that will draw positive charges to the surface of the device. This would be generally conductive materials. It is fairly unlikely that accidental and bad operation of the machine could occur in a lab environment with a conductive material, so the team sees that as a moot point. The reliability of screen operation is rather consistent since normally this is a glassy material with a thin layer that is conductive to assist in the conduction from the hand. Though not that conductive layer is not required in principal. This means the wear is much less than more traditional interfaces.

Surface Acoustic Wave (SAW) Screens

A general description of this technology is that it uses Low frequency waves being sent through glass and identification is done through disruption of the waves on 2 axis. This type of touchscreen is designed for high volume of individuals to be contacting it on a daily. This is typically implemented in malls or public environments. That way the device does not break through general wear and tear. This can occur with the resistive and capacitive since they have layers that can peel. This technology allows for a very robust interface assuming no blunt impacts occur since it is implemented with glass. This technology is also susceptible to oil's and water, surface material that is already not accounted for from manufacturer can change its operation, so this is typically used indoors.

Touchscreen Technology and Comparison

Table 26 - Touchscreen Technology Comparison

	Resistive	Capacitive	SAW

Ease of use	Medium	Easy	Easy
Reliability of operation/response	Medium	High	High
Wear and tear	Easily wears	Low wear	No blunt/material deposition
Size	Wide range	Wide range	Only larger panels
Cost	~$10-$80	~$20-$150	~$150+

We decided to go with capacitive touchscreen since it is generally less costly while having low wear and tear. SAW touch as a technology is a close contender but generally the panels for purchase were on the larger side while being fairly expensive. This is likely because these panels are more often used in commercial settings, consumer level devices typically opt for smaller screens. There is little worry between resistive and capacitive touch since both fall within budget. The team would opt for capacitive because of its superior response and consistency during operation. Though a high quality resistive touch could fill a similar role since the environment the device is meant to operate in would likely keep the touch screen from wearing too quickly.

3.14.2 Touchscreen Selections

The team compares many touchscreen interfaces focusing on higher quality small displays. This is because we have minimal ui that we want to implement, we want to view files that are stored on the machine to print. Subsequent selection of files, confirmation of print start and confirmation of print cancellation, all as options after file selection. That is our bare minimum from our display, pretty much any display can operate that, and any touchscreen, so the question is just which would be better for reliability sake. In the previous technology section the team notes that the main contenders are resistive and capacitive displays. While resistive displays are more prone to wear because of the operation they handle with every 'press' of the screen. Though currently there are many modern resistive screens that seem to have better materials. There still is this obvious benefit of resistive screens that they can be used with non-conductive gloves or something covering the hand. So we directly compare and note the tradeoff of usability between capacitive and resistive as being negligible to the use case other than hand coverings and clutter which is also unlikely in a lab setting. Another thing to note is that many of these displays have multiple methods of communicating with the display. Each of these methods have other modes to be able to communicate with more or less connections. Some of these communications include standard methods of communication that are designed for consistent communication.

CFAF3202

CFAF3202 display is a competitive resistive touchscreen display. It has multiple display communication methods that are able to be utilized. Typically The team is opting for the communication method that provides the most connectivity for the least pinout, the team

suspects SPI will be one of the better communication protocols. It wouldn't stop nor really hinder us if we need to use another, only if we run out of pinout on other devices and use an IO expander. Noting this is a higher pinout display, even if there are many pins that in our implementation are left unconnected or just left high through its process. This display is at a middling cost in comparison to some displays. This display seems decent but does not provide many ways to help us in our development process.

ER-TFT.51-1

Another option that was considered was a capacitive touch display. The ER-TFT.51-1 display is a bar type display that just like the rest, has different ways of communicating the display. Another thing of note is that it is a capacitive display. This display has the most performance out of the ones that we looked at. Though the implementation seemed to be the biggest issue. It requires a separate controller board that is on their face designed for specific boards to communicate to. So it may take extra development time in order to implement this specific board because its design is pointed toward specific development boards. This is a real damper on the use of the board so the team decided to move on from this board.

ER-TFT.44-1

The ER-TFT.44-1 is a much smaller display, and considered on the basis that it's simpler to control. This is because it is generally a smaller display, meaning less LCD to control. This display also gives us the option between resistive and capacitive. This gives us some flexibility on the design without having to change any embedded programming if the fundamental technology gives us issues. I highly doubt that the technology would cause issues, but it would could do response or wear and tear issues as mentioned in technology sections. Regardless this is a really small display and may limit the UI that we can provide to control the printer. It may even be too small in the way that we may not have longer files names be legible on the screen since it is an inch and a half length for the display.

ILI9341

The ILI9341 display has many benefits going for it. It includes SD card access. Has simplified pinout, many of the same common protocol we would use between LCD's. It has a development board that makes it easier to prototype with. It's complexity level is low on the development board since its focus is on the prototyping phase. The LCD also has many options for sizing without changing the embedded programming that would go into it going into the second phase of senior design. This LCD has a resistive touchscreen which would allow for usage even with covered hands. It is also fairly priced without compromising on the other performance metrics such as brightness and resolution. This is a strong contender for our design.

Touchscreen Comparison and Selection

Table 27 - Touchscreen Comparison

Features	CFAF3202	ER-TFT.51-1	ER-TFT1.44	ILI9341
Pin count	50	40	26	20
Communication	16-bit Parallel, 18-bit Parallel, 8-bit Parallel, 9-bit Parallel, DOT-CLK interface / Generic RGB, SPI	18-bit Parallel, 16-bit Parallel, I2C, DOT-CLK interface/ Generic RGB, 4-wire SPI	8080-Parallel, 3-wire SPI, 4-wire SPI, Serial interface, 8-bit Parallel	3-wire SPI, 4-wire SPI, 8-bit Parallel, 9-bit Parallel, 16-bit
Touch types available	Resistive	Capacitive	Resistive/Capacitive	Resistive/capacitive
Backlit?	Yes	Yes	Yes	Yes
Controller board required	No	Yes	No	No
Resolution	320x240	340x800	128x128	240x320
Brightness	330 cd/m^2	400 cd/m^2	180cd/m2	330 cd/m^2
Cost	$50.71	$36.59	$7.10	$16.99

The ILI9341 is the teams choice of product for our LCD. This is for many reasons some of which are listed in the table above. We believe the development time needed to implement this board now and later could be superior to other LCD we looked over. Its fairly cost effective, low pin count leading to little confusion during implementation, and strong performance characteristics pushed this LCD to being our final decision on this product for our design.

3.15 Power Supply

The power supply system provides electrical energy to all the components withing the conductive ink printer. A reliable, appropriately sized power supply is essential for stable

system operation, as inadequate power capacity or poor voltage regulation can cause stepper motor stalling, microcontroller resets, display malfunctions, or unpredictable behavior. The power supply must deliver sufficient current to meet peak demand when all components operate simultaneously, maintain stable voltage under varying loads, and provide appropriate voltage levels for different subsystems. This section first presents the power supply types and overall power requirements of the system through analysis.

Any power supply contains a transformer, rectifier and regulation of some sort to output a low noise DC signal. There are different orders and ways to get that same result, with some trade-offs. Linear and switching power supplies can both cause their own issues on the power rails. Linear power supplies are less efficient than switching as their primary trade off. Switching power supplies mainly can include random noise that might need to be accounted for.

3.15.1 Overall power draw

Table 28 - Power Usage Table

Component/Subsystem	Supply Voltage	Nominal Current	Peak Current	Nominal Power	Peak Power
Mainboard MCU (STM32H7)	2.6V-3.6V	250mA	500mA	240 mW	1.2 W
Stepper Motors (4x)	12V	400mA	1.5A	36 W	100 W
ILI9341	2.4V - 4.2V	8mA	300mA	26.4 mW	1.5W
Head MCU (ESP32-WROOM-32)	2.6V - 3.6V	90-160mA	240mA	0.4-0.8W	1.2W
Dispensing System	12-24V	200-500mA	1.0A	2.4-12W	24W
Camera Module	5V	22 mA	200mA	1.2 W	1.0W
LED Indicators	3.3V/5V	20-60mA	100mA	0.1-0.3W	0.5W
Hot Plate					
Total		2.5 A	8.3 A	65 W	129 W
With 20% Safety Margin		3.0 A	10 A	78 W	155 W

The system requires three primary voltage rails: 24V for stepper motors and high-power actuators, 5V for logic-level electronics and displays, and 3.3V for microcontrollers and low-voltage sensors. The 24V rail draws the majority of power, with stepper motors representing the largest individual loads. Peak current on the 24V rail approaches 7A when all four stepper motors operate simultaneously at maximum current, though typical operation averages around 2A since motors do not continuously draw peak current. The 5V and 3.3V rails consume relatively little power, with combined draw under 10W even at peak.

The analysis reveals that a 24V power supply rated for continuous delivery of 5-6A (120-144W) with peak capability of 7-8A (168-192W) provides adequate capacity. A 150W or 180W rated supply offers appropriate margin without excessive oversizing. The 5V rail requires modest capacity of 2A continuous (10W) with peaks to 3A (15W), suggesting a 15-20W buck converter or linear regulator. The 3.3V rail can be derived from the 5V rail using onboard LDO regulators on the MCU development boards, requiring no separate supply.

3.15.2 AC to DC Power Supply Comparison

Commercial off-the-shelf (COTS) power supplies will be utilized to meet the electrical power requirements of the conductive ink printer. To determine the appropriate power supply for all system components, it is important to first examine the power supply specifications of the base platform used in this project — the Creality Ender-3 V2 Neo [16], the model modified by the team into a conductive ink printer. The Ender-3 V2 Neo is designed to operate on standard AC wall power, accepting input voltages in the range of 100-240V AC at 50/60 Hz, and delivering a regulated 24V DC output at approximately 14.6 A, yielding a total rated power at 350 W. While the 350W rating is common across much of the Ender lineup, select models deviate from this — the Ender-6 is rated at 360W, the Ender-5 Plus at 550W, and the Ender-3, Ender-3 Pro, and Ender-5 Pro each at 270W. With the additional power demands introduced by the ink delivery system, heating elements, and modified printhead components of the conductive ink conversion, the existing power infrastructure will be assessed to determine whether it remains sufficient or whether a supplemental COTS power supply is needed. COTS solutions are favored in this context for their affordability, accessibility, proven reliability, and adherence to established electrical safety standards.

CMS 350-24 (Creality)

The Creality CMS 350-24 [68] is a switching power supply offering 24V at 14.6A for a rated output of 350.4W. It supports a dual input voltage range of 100-120V or 200-240VAC, making it compatible with both North American and international mains standards. The unit operates across a wide temperature range of -20°C to +70°C and uses an active fan for cooling. It provides basic protections including short circuit (SC), overvoltage (OV), overload (OL), and over-temperature (OT) protection, though overload protection method and efficiency figures are not specified. At $31.67, it is the most affordable option in this comparison and is available through Creality's own channels, though availability is rated as medium. Key unknowns — including MTBF, ripple and

noise, and leakage current — limit the ability to fully assess its reliability and electrical quality relative to the other candidates.

LRS-350-24 (Mean Well)

The Mean Well LRS-350-24 [69] is a well-established switching power supply delivering 24V at 14.6A with a rated output of 350.4W. It accepts input voltages of 90-132VAC or 180-264VAC at 47-63Hz and achieves an efficiency of 88%, with a ripple and noise specification of 150mVpp. The unit operates between -25°C and +70°C, benefits from fan cooling, and carries an impressive MTBF of 328,600 hours at 25°C. Overload protection is handled via hiccup mode, and the supply also includes overvoltage and over-temperature protection. It is classified as Safety Class III. Priced at $31.40 via DigiKey, it represents an excellent balance of cost, performance, and availability — the latter being rated high — making it one of the most practical choices in this comparison.

PMT-24V350W1A (Delta)

The Delta PMT-24V350W1A [70] is a switching power supply rated at 24V, 14.6A, and 350.4W. It accepts 90–132VAC or 180–264VAC input at 47–63Hz, with an efficiency of 87% and a ripple and noise of 240mVpp — the highest in the comparison, which may be a consideration in noise-sensitive applications. The unit has a wide operating temperature range of -10°C to +70°C, uses fan cooling, and is rated to Safety Class II. Its leakage current is specified at up to 3.5mA at 240VAC. The MTBF is exceptionally high at 700,000 hours at 35°C, far exceeding every other unit in the table, which speaks to Delta's reputation for robust, long-life industrial power solutions. Overload protection uses a latch/hiccup mechanism, with overvoltage, overload, over-temperature, and short circuit protections all included. At $79.94 via DigiKey with high availability, it is a compelling option where longevity and reliability are paramount.

WMA350H-24 (Cosel)

The Cosel WMA350H-24 [71] is a switching power supply delivering 24V at 14.6A for a rated output of 350.4W. It accepts 85–132VAC or 170–264VAC input — a slightly wider low-end input range than most competitors — and achieves 87% efficiency with a ripple and noise of 150mVpp. Leakage current is very low at less than 0.3mA at 115V or 0.5mA at 240VAC, which is among the best in this comparison. The unit operates from -20°C to +70°C with fan cooling. MTBF data is not specified, and the overload protection method is not listed, which limits full reliability assessment. Protections include overvoltage and overcurrent only, a narrower protection suite than several competitors. Priced at $90.18 via DigiKey with medium availability, the Cosel unit is on the higher end of the cost spectrum relative to its listed specifications, though its low leakage current may make it preferable in safety-critical or medical-adjacent applications

Power Supplies Comparison and Selection

Table 29- Power Supplies Comparison Table

	CMS 350-24	LRS-350-24	PMT-24V350W1AK	WMA35OH-24
Manufacturer	Creality	Mean Well	Delta	Cosel
Type	Switching	Switching	Switching	Switching
Rated Output Voltage	24V	24V	24V	24V
Rated Output Current	14.6A	14.6A	14.6A	14.6A
Rated Power	350.4W	350.4W	350.4W	350.4W
Input Voltage	100-120/200-240VAC	90-132/180-264VAC	90-132/180-264VAC	85-132/170-264VAC
Input Current	6.8A/3.4A or 3.4A/2A @ 30VAC	6.8A/5WAC or 3.4A/3.0VAC	7A/115VAC or 4A/230VAC	6A/115VAC or 3.3A/230VAC
Efficiency	NA	88%	87%	87%
Frequency	50/60Hz	47-63Hz	47-63Hz	47-63Hz
Ripple & Noise	NA	150mVpp	150mVp	150mVp
Leakage Current	NA	<2mA/240VAC	<3.5mA/240VAC	<0.3mA/115V or <0.5mA/240VAC
Operating Temperature	-20°C ~ +70°C	-25°C ~ +70°C	-10°C ~ +70°C	-20°C ~ +70°C
Cooling	Fan	Fan	Fan	Fan

MTBF	NA	328.6K hrs (25°C)	700K hrs (35°C)	NA
Protections	SC, OV, OL, OT	OL, OV, OT	OV,OL,OT,SC	OC,OV
Overload Protection Method	NA	Hiccup Mode	Latch, Hiccup	NA
Safety Class	NA	Class III	Class II	NA
Dimensions (mm)	215x115x30	215x115x30	215x115x50	115x30x215
Weight (kg)	0.63	0.76	0.82	0.8
Cost (USD)	$31.67	$31.40	$79.94	$90.18
Availability	Medium	High	High	Medium

Protections Key:

- OL = Overload Protection
- OV = Overvoltage Protection
- OT = Over-Temperature Protection
- SC = Short Circuit Protection
- OC = Overcurrent Protection

After comprehensive evaluation of power supply options, the Mean Well LRS-350-24 switching power supply was selected for the primary 24V system rail.

The LRS-350-24 [69] provides 350W continuous power output at 24V (14.6A), significantly exceeding the calculated system requirement of approximately 168W peak (7A). This substantial power margin ensures the supply operates well below its rated capacity during normal operation, reducing thermal stress and extending operational lifetime. The 328,600-hour MTBF (mean time between failures) at 25°C indicates high reliability suitable for continuous operation. Mean Well is a globally recognized power supply manufacturer with extensive experience in industrial, medical, and embedded applications, providing confidence in product quality and long-term availability.

The 88% typical efficiency minimizes wasted energy and heat generation. At maximum load, the supply dissipates approximately 47W as heat compared to 82W for an 80% efficient supply—this 35W reduction significantly eases cooling requirements and reduces operating costs over the system's lifetime. The wide input voltage range (90-132VAC / 180-264VAC) accommodates both North American (120VAC) and international (230VAC) mains voltages without manual switching, providing flexibility for use in different regions.

Built-in protection features include overload protection (hiccup mode), overvoltage protection, and over-temperature protection. Hiccup mode protection responds to overload conditions by shutting down, waiting, and attempting restart—this protects both the supply and connected equipment from sustained overcurrent conditions while automatically recovering if the fault clears. The 150mVpp output ripple and noise specification is acceptable for motor drivers and logic circuits, though additional filtering may be added if needed for noise-sensitive analog circuits.

The compact enclosed design (215 × 115 × 30 mm) with built-in mounting holes facilitates integration into the printer enclosure. Active fan cooling maintains safe operating temperatures across the full load range. The supply operates across a -25°C to +70°C ambient temperature range, accommodating both laboratory and workshop environments. At approximately $38 from DigiKey, the LRS-350-24 offers excellent value. While the Creality CMS 350-24 costs less ($32), the additional $6 provides significant advantages: higher efficiency, documented MTBF rating, wider operating temperature range, and proven reliability from an established manufacturer. The UHP-350-24 offers superior efficiency (94%) and convection cooling, but its $69 cost and ultra-slim form factor (62mm × 31mm profile) provide benefits not essential for this application.

The LRS-350-24 is widely stocked by major distributors including DigiKey, Mouser, Newark, and Amazon, ensuring easy procurement and availability of replacements if needed. The extensive documentation, application notes, and support resources available for Mean Well products facilitate troubleshooting and system integration. For a senior design project requiring reliable demonstration capability and potential future expansion, the LRS-350-24 provides the optimal balance of specifications, reliability, and cost.

3.16 Voltage Regulator Selections

3.16.1 Voltage Regulator Technology Comparison

Linear Regulator

Linear power supplies can offer very little noise within the power rails. This is because Linear supplies include a voltage regulator that just works on a transistor and its V-I characteristics to supply an output voltage. This can be shown as a ratio to see the range of voltage and current necessary for the output of that specific transistor. A linear power supply architecture differs from switching in the lack of a few items, but most notably a switch. This is to further the point that this only works within a range of values due to the specific transistor on the regulator.

Switching Regulator

A switching power supply provides a lot of flexibility over a linear supply due to its use of PWM to regulate output voltage. By switching when power is sent to its output by monitoring the output switching supply can only send power when necessary. This is more efficient than a constant ratio that is utilized in a linear supply. For the same reason switching supply has a higher range of inputs for a set output of voltage regulation, depending on how much even a greater voltage than is brought at input. So step-up and

step-down switching supplies exist. Known trade-offs include high frequency distortions that can come off of the power supply, which can affect more sensitive equipment.

The Ender 3 we are retrofitting comes with LRS-350-24. We are likely to keep this power supply since we likely do not need more nominal power and are unlikely to deal with significant peak power restrictions.

Regulator Technology Comparison and Selection

3.16.2 Voltage Regulator Part Comparison

Some of the considerations we are generally looking for is that the footprint actually be on the larger side for the purposes of prototyping and testing. That there is decent performance without trading in Low cost. These regulators were chosen based on the TI webench tool as it generates the circuit based on the datasheet already following its intended circuitry while saving us the development time we would have used following it.

Regulator LM2576

The LM2576 [45] is a simple switching regulator that keeps its footprint on the larger side which we want for prototyping in the case that any issues come up later. It still provides us with the more efficient technology of switching regulation. This is a very common part as well so it is easy to source. This regulator also has a wide range in its series, even though we only need 3.3V and 5V regulation we have a high 24V to step down from. This series is capable of this range as well.

Regulator TPS54231

The TPS54231 [46] is a common switching regulator that TI provides. The trade off is that it typically gives us smaller footprints to work with, just due to the series production sizes. Another issue that came up in trying to design with this chip was that the TI webench tool would generate the board as being 4 layer, which is something we want to avoid in prototyping. This issue minimized development time savings that we spend using TI webench as well. Since we would spend time just rerouting the regulator when we enter rapid prototyping. Even if this is short period its more than we want to spend with very similar regulation options that do not require us to this.

Regulator TPS6293

The TPS6293 [72] is a regulator found through the TI webench tool. This voltage regulator is a high frequency switching regulator, that switches at 200Khz to 2Mhz switching. This is a consideration that did not originally come up but this can create frequency related issues later in our design. Not to mention this regulator is also rather footprint dense and can be more difficult on the prototyping phase of this project.

Voltage Regulator Part Comparison and Selection

	LM2576	TPS54231	TPS6293	

Efficiency				
Footprint				
Switching frequency range				

3.17 Communication Protocols

3.17.1 I2C

3.17.2 SPI

3.17.3 UART

3.17.4 Communication Protocol Comparison

Table 30 - Communication Feature Set Table

	I2C	SPI	UART	CAN
Expandable	YES	YES*	NO	YES
Data lines	2	4	variable	2
Timing	400Khz - 1/Tr	CLK rate	+/- 10% async clk	MCU + baud prescaler
Data rate	100 – 800 kbit/s	Depends on frequency limit of peripherals	Multiple discrete modes	Dependent directly on MCU
Complexity	Low	High	Low	Medium

Table 31 - Communications Pros/Cons Table

	I2C	SPI	UART	CAN

Pros	Simplicity Outlined more explicitly in implementation Discrete Variable data rates	Higher throughput No clock synchronization issues Arbitrary message sizes No standard	Parity bits Flow control	Built in priority system A Non-return-zero system
Cons	Capacitance requirements are dependent on the speed of the I2C mode Buffering could need to be introduced Multiplexing may need to be introduced if there is enough devices on one line. ID allocation	Increased pinout requirement No formal standard	Normally used between larger computation devices Cannot add more devices without breaking standard	Nodes require MCU ID allocation Multiple explicit message limitations

We want to maximize the positive gains we get from using certain communication protocols with certain devices. To be very pragmatic behind our choices between I2C, SPI, UART and CAN in different portions of the mainboard. The team opted for mainly I2C and SPI for our communications even when presented with the option of the other 2 in a few cases. This is partially due to development time of another new protocol in our system. Mainly the node requirements of CAN put us off and UART isn't as expandable as the first two protocols.

This to be said that we aren't necessarily choosing to use one or another but keep track of their benefits in the context of our system. So our decision will be based on how well we can make use of each in their context or on device requirements.

For the stepper motor drivers, these do not need to be controlled by any sort of communication protocol but rather by a special signaling known as step and direction. Rather, they support or SPI or UART interface for optional configuration of and feedback from the driver. As we desire feedback, we picked an IC that supports SPI rather than UART since there would not be enough channels for UART with all at minimum four motors. The motor driver on the head will also likely be connected by SPI. For the interface LCD, it will likely use SPI since most LCDs use SPI for fast data rates. For communication

between the head and printer MCUs, UART may be used for simplicity albeit it may strain on the channels available.

3.18 Slicer Software

3.18.1 Slicer Technology Comparison

The first step to turning a Gerber file into something that can be printed using the C.I.P. This will involve being able to interpret the Gerber file and break it down into separate layers that can be then converted into G-code that will be used by the C.I.P to tell it where to move the motors and how to extrude the ink as well as any needed tool change information for different layers as well as any heating time at the end to cure the ink. There already exist some slicers for turning a Gerber file into a G-code script for a machining device, but most are designed for traditional subtractive methods they could be modified though to work with an additive method. Alternatively, due to the specific needs of this project, it could be worth developing a custom slicer to allow for the multiple tool heads as well as detecting where insulative ink needs to be placed for crossovers and vias.

pcb2gcode

pcb2gcode [73] is a CLI (command line interface) software designed to take a Gerber file and convert into RS-274 standard G-code [74]. The software is designed to allow for double sided PCB milling as in a traditional subtractive method. This software lacks a clear wiki but seems to have an active development community with a brand-new release on its GitHub as of 4 days ago at the time of writing.

Line Grinder

Line Grinder is another alternative software designed to convert Gerber files into G-code. Line Grinder offers the ability to convert Gerber files, flip bottom layers on the x and y axis, can edge mill a PCB out of a larger board, generates bed-flattening code, and visually displays the Gerber file and G-code [75]. Not too much seems to differentiate it from pcb2gcode besides the choice of programing language in C# rather than C++ and its ability to mill boards out of larger boards.

gbr2ngc

gbr2ngc is another slicing software that offers translation capabilities. gbr2ngc features RS-274X compliant G-code generation, polyginal underlying models, tool offsetting and fill pattern option [76]. gbr2ngc seems to have the strongest documentation thus far with included documentation on its github page on how to use the commands for the program as well as a document for how to develop it.

gerber_to_gcode

gerber_to_gcode is a python software designed to interpret a Gerber file to then be able to dispense solder paste on the pads [77]. This program while a simple python program, lacks any strong documentation or community support. The project is dependent on the outside

program gerber_to_scad only rather than creating a solder stencil just designed G-code to do the solder pasting.

Custom Slicer Design

A custom slicer would allow for full control over the design of the slicer to take in parameters for ink type, nozzle size, machine size, and crossover inclusion. This option would allow for a custom scope design that fully captures the needs of this project. All other slicer options seem to be designed for subtractive manufacturing which while lead to similar G-code generation lack the crucial need of the insulator layer that this project required due to its additive nature.

Slicer Comparison and Selection

Table 32 - Slicer Comparison and Selection

	pcb2gcode	Line Grinder	gbr2ngc	gerber_to_gcode	Custom Slicer
Language Written In	C++	C#	C++/C	Python	N/A
Community development	Yes	No	Yes	No	N/A
Documentation	No	No	Yes	No	N/A
Intended Usage	Double sided PCB Milling	Double sided PCB milling	PCB milling	Solder paste dispensing	N/A

While the other slicer options present a useful starting point and remove the need for some of the work needed for the project. The best option would be to design a custom slicer. While this may lead to more work it will present the best option for adding the features needed for the C.I.P. A custom slicer would allow for all custom profiles and information needed and the ability to integrate most smoothly with the firmware as the slicer can be designed to work with whatever firmware option is chosen.

3.18.2 Three Custom Slicer Design Parts

The goal of the C.I.P's custom slicing software is to provide a method of converting the provided Gerber files into G-Code to be understood by the firmware for motor control. The slicer will take in parameters for both the Gerber files as well as ink selections and will include printer information. The slicer will be made of 3 parts: the Gerber parser, the G-Code converter, and the GUI to improve the user experience.

3.18.3 Gerber Parser Library Selection

Pygerber

Pygerber [78] is a comprehensive library that offers features a tokenizer, a parser, an introspection API, a rasterized and a vector 2D rendering engine, and a Gerber X3/X2 language server. The goal of the library is simplifying use with the Gerber standard and offers backwards compatibility for older versions of the standard. Pygerber contains a series of APIs to improve integration into the project. This should allow for easy interaction with any uploaded Gerber files and parsing them into a state that can be used with the G-code generation library.

Gerber to SVG

Gerber to SVG [79] is a library written to do exactly what the name indicates. The library is designed to convert Gerber files to SVG images. The library is intended to allow for easier laser cutting of Gerber files but could be used to take the Gerber file to an SVG to allow for standard 3d printing. This would cause the SVGs to lose distance association with each other but could still be useful for converting out of the Gerber standard.

CADence

CADence [80] is a tool written in C# for working with Gerber files. The library contains classes for each layer of the PCB as well as support for parsers, and factories to allow for better data manipulation. This library provides another tool for interacting with Gerber files but it being written in C# lead to possible incompatibility issues and its lack of documentation makes solving those issues even harder.

Custom Library

Writing a custom library allows for infinite customizations and choice in parsing the Gerber file and future conversion to G-Code but also shows the most effort needed. Choosing to design a library comes with no prewritten support or documentation but it allows for completely custom design and creating tools specifically to need for the project.

Library Comparison and Selection

Table 33 - Slicer Library Comparison

	Pygerber	Gerber to SVG	CADence	Custom Library
Language Written In	Python	Python	C#	N/A
Comments	Yes	Yes	Yes	N/A
Documentation	Yes	Yes	No	N/A

Intended Usage	Parsing Gerber files, Converting Gerber files to image files	Converting Gerber files to SVGs and PNGs for machining	Parsing Gerber Files, Creating SVGs, Calculating object distance	N/A
Cost	Free	Free	Free	Free

In conclusion the best decision seems to be to use Pygerber as the library of choice. Due to its documentation and its tool suite it seems to provide the best use for this project. Purely for technical learning it may be opted to add some custom functionality and a custom library but the most applicable library to use would be Pygerber.

3.17.4 G-Code Generation Libraries

The G-Code generation libraries will be used to take the parsed Gerber files and to convert them to G-Code for use with the C.I.P. Pre-existing libraries/softwares may provide compatibility with the standard Ender 3 and save time converting the Gerber files once parsed.

gscrib

gscrib [81] is a library designed to create custom G-Code featuring: core G-code generation, Advanced Path Interpolation, temperature and tool control, state management, transform utilities, heigh compensation, customizable hooks, live sensor data, multiple output options, and built in error handling. The library uses a set of functions to take parameter data and generate G-code off of it. Once combined with the parser it would likely be able to take in the information that the user also puts in to generate a path. It also seems to have the documentation to easily be able to handle the more advanced shapes a Gerber file could contain.

PythonicGcodeMachine

PythonicGcodeMachine [82] is another library designed to work with G-code. This library offers a full parser of RS-274 standard G-code. It also offers tools for manipulation of G-code as well as tools for validating it. The documentation of this library seems to be vague, but it could possibly be used in conjunction with another library or a custom one for validation of the G-code as long as it follows the RS-274 standard. Other flavors are partially supported.

g-code-lib

g-code-lib [83] is another python-based library that slows for G-code generation. This library advertises simple 2D geometries, 2D shape transforming, drilling, as well as converting the final G-code to a SVG file. This library also offers a wiki for documentation on its GitHub file. While it seems to have several easy-to-use simple functions it also does not seem to have enough to offer for this project where more complex apertures may be needed for pad and trace design.

Custom Library

Writing a custom library to interact with the parser while complex would allow for the most flexibility. The custom library could be used to write any flavor of G-code for the firmware and could include custom functions not included in other libraries. This increased level of flexibility would possibly allow for more efficient and complete G-code generation as Gerber files are not normally considered in additive slicers with the possibly only exception being the Voltera slicer.

Library Comparison and Selection

Table 34 - G-Code Generation Library Comparison

	gscrib	PythonicGcodeMachine	g-code-lib	Custom Library
Language Written In	Python	Python	Python	N/A
Comments	Yes	No	No	N/A
Documentation	Yes	Yes	Yes	N/A
Intended Usage	Complete g-code generation including complex shapes	Parsing and validating G-Code	Simple 2D shape generation, and drilling	N/A
Cost	Free	Free	Free	N/A

Overall, the best option for this project seems to be gscrib. Due to how thorough gscrib 's documentation seems to be as well as its ability to generate complex tool paths and take in a multitude of information when generating the G-code it seems to be an ideal choice. If the library can be configured to interact with the parser correctly and take in the information from the user interface, then this should be capable of creating G-code that the firmware can understand. The biggest risk of this library is that it doesn't specify a G-code flavor that is being used but as the firmware will also be custom this should not be an issue. If custom abilities are needed the documentation also provides information on adding custom scripts/G-code generation.

3.18.5 GUI Libraries

The GUI library is designed to provide a better user interface with the finalized slicer. This will allow the user to more easily select which ink types and nozzle size will be used as well as allowing for file(s) selection to run on the C.I.P.

Tkinter

Tkinter [84] is the standard Tcl/Tk GUI toolkit library that comes preinstalled with Python. This is perhaps the simplest library in terms of options but would have the largest amount of documentation due to it being the Python standard. It comes with simple widgets and visuals but lacks more thorough features such as "GUIs driven from data sources, databases, or for displaying or manipulating multimedia or hardware" [85].

PySide6

PySide6 [86] is the official wrapper for the Qt 6.0+ framework designed to provide GUIs with the Qt framework. PySide6 is wrapper for the C++ written Qt toolkit that provides full resources for complete application development. As this is considered the official version for python PySide6 it has the most support from the Qt Company and receives updates with Qt updates. PySide's biggest issue is that as it is the official version rather than the opensource version it slightly lags behind PyQt in updates and documentation.

PyQt

PyQt [87] the main competitor to PySide and represents an open-source alternative. It offers similar features to PySide. Its biggest pros in relation to PySide are its better community support and its more frequent update schedule. Its largest drawback is its lower community support.

wxPython

wxPython [88] is another alternative GUI toolkit for making GUIs in python. The toolkit wraps the widgets which are written in C++ for use in Python. wxPython is an open-source project with active development and support from the designers. Not much separates it from other GUI operations and tends to have "certain platform-specific quirks" [85]. This leaves while a possible option one that does not provide much reason to use besides its popularity.

Library Comparison and Selection

Table 35 - Slicer GUI Library Comparison

	Tkinter	PyQt	PySide6	wxPython
Language Written In	Python	Python/C++	Python/C++	Python/C++
Comments	Yes	Yes	Yes	Yes
Documentation	Yes	Yes	Yes	Yes
Intended Usage	GUI Development	GUI Development	GUI Development	GUI Development

Cost	Free	Free	Free	Free

Due to its wide support and being natively installed with Python and its native support from the Python Software Foundation we are going to use Tkinter for our project. Since the GUI design is only intended to allow for simple functionality and small customization of the print setting as well as allowing for uploading to the PCB it will be the best option for this project. Though other libraries may offer more options and customization the GUI for this project only needs to be a simple window with some drop down menus, a file upload option, and some small custom input boxes.

3.18.6 Slicer Language Selection

Due to the library choice as well as the ease of programming it makes sense for the main slicer program to be written in Python.

3.19 Embedded/Firmware

The goal of the firmware software is to provide an embedded low-level control over the motors and to handle interruptions and tool changes for the C.I.P. The firmware must contain a method to process the G-code sent from the slicing software as well as a real-time operating system for handling tasks such as interrupting and moving the motors concurrently. Before designing the firmware, it must first be determined if it is better to use pre-designed open-source firmware or to design a custom firmware.

3.19.1 Marlin Firmware

Marlin firmware and Marlin 2.0 [89] are considered an industry standard for open-source slicer options for many 3D printing companies such as Creality, Prusa, LulzBot, and more. The Marlin firmware boasts a large community of makers and strong documentation for modifications needed. Voltera even offers a slicer based on the Marlin firmware [90]. Marlin offers features such as multiple motion systems, an extensive G-code vocabulary with over 150 commands, a multitude of machine types, with different styles of additive and subtractive manufacturing, bed temperature control, automatic calibration and compensation, print job control, and a LCD menu interface.

3.19.2 Klipper

Klipper [91] is an alternative custom firmware designed for 3D printers. Klipper is designed to offload much of the computational work to an SBC and lets the microcontroller(s) handle the movements. This leads to Klipper having the best stepper rates. Klipper offers features such as a high stepping rate, using multiple microcontrollers, smooth pressure advance, support for multiple microcontroller architectures, code written in python to make reading simple, constant acceleration and look-ahead support, support for a variety of motor drivers, and LCD screen display support. Klipper offers community support along with its documentation though it hasn’t been around for as long as Marlin.

3.19.3 Custom Firmware

Utilizing custom firmware for this project would lead to the most control over the C.I.P but would require the most investment and knowledge over how the printer needs to be designed on a hardware, electrical, and physical level. Using custom firmware would lead to needing to solve acceleration issues, simultaneous motor movement, touchscreen support, bed leveling, adding temperature controls. Features that would want to be introduced in custom firmware are head bed support, simultaneous microcontroller communication and control, motor driver support, acceleration and movement physics, automatic compensation for ink ooze, print job control, and a touch screen menu interface.

3.19.4 Comparison and Selection

Table 36 - Firmware Comparison

	Marlin	Klipper	Custom Firmware
Language Written In	C++/C	C	N/A
Documentation	Yes	Yes	N/A
Community Support	Yes	Yes	N/A
Features offered	multiple motion systems extensive G-code bed temperature control. automatic calibration and compensation print job control. and a lcd menu interface	using multiple microcontrollers smooth pressure advance constant acceleration and look-ahead support support for a variety of motor drivers lcd screen display	N/A

Due to the level of documentation, community support, and popular development as well as the fact that the projects that we are basing our senior design project on use the marlin firmware out project will as well. The marlin firmware will offer a strong foundation for our project but will require modification to allow for multiple microcontroller integration, communication with the SBC, updating to a touchscreen-based user interface.

3.20 Camera Vision

3.20.1 Computer Vision Platform Selection

Raspberry Pi OS

The Raspberry Pi OS is the Raspberry Pi 5's native operating system and is specifically made for it. It provides both a GUI through its desktop environment and Command Line Interface (CLI). The operating system idles at a consumption of 420 MB of RAM, which leaves approximately 3676 MB, or 89.7%, of RAM still available. It has a moderate boot time of 19 seconds and a low average power consumption of 2.7 W and moderate stressed power consumption of 8.8 W [92]. For serial communication with the microcontroller, it has robust GPIO support since the libgpiod and gpiozero libraries are configured already to handle the Raspberry Pi 5's architecture [93].

Ubuntu

Ubuntu is a Linux distribution and operating system that is in common use in industry. It provides a GUI through a desktop environment and a CLI. While it is more polished and suitable for regular desktop computing use than the other OSes considered, it consumes 920 MB of RAM on average at idle, which is more than double the RAM consumption of the Raspberry Pi OS. This leaves about 3176 MB, or 77.5%, of RAM still available. It has a long boot time of 28 seconds and a higher power consumption of 3.1 W on average and 9.4 W under stress. It does not have pre-installed GPIO support specifically for the Raspberry Pi 5, but libraries to handle GPIO and serial communication can be installed through the apt package manager. We are familiar with Ubuntu both in the GUI and CLI [94].

DietPi

DietPi is an operating system made for the Raspberry Pi that is a highly stripped-down variant of Debian Bookworm. It provides only a CLI to save resources taken by a GUI desktop interface. It consumes a mere 118 MB of RAM on average at idle. This leaves 3978 MB, or 97.1%, of RAM still available. It has a short boot time of 6.2 seconds, saving frustration. It runs at a low power consumption of 2.6 W on average and 7.9 under stress. It does not have pre-installed GPIO support, but it can be installed through the dietpi-software file manager [95, 96].

Computer Vision Platform Comparison and Selection

Table 37 - Computer Vision Platform Comparison Table

	Raspberry Pi OS	Ubuntu	DietPi
OS Average Idle RAM Usage	420 MB	920 MB	118 MB
Interface	GUI and CLI	GUI and CLI	CLI only

Average Boot Time	19 seconds	28 seconds	6.2 seconds
Average Idle Power Draw	2.7 W	3.1 W	2.6 W
Maximum Power Draw	8.8 W	9.4 W	7.9 W
Built-in GPIO Support	Yes	No	No
Familiar	No	Yes	No

We chose the default Raspberry Pi OS because it is moderately balanced between the computer-intensive Ubuntu and stripped DietPi. The Raspberry Pi OS is clearly better than the Ubuntu OS with lower RAM usage, power consumption, and boot time while maintaining most features needed for computer vision. For example, a GUI is available for viewing of pictures, and native Raspberry Pi-specific GPIO libraries. The Ubuntu OS does not really have any advantages other than being familiar to us. As for the DietPi, it was a more difficult decision to choose the Raspberry Pi OS. The DietPi's RAM consumption and boot time is far better than the Raspberry Pi OS's, and the power consumption is comparable. The DietPi is lacking in quality-of-life features, however. While its RAM consumption is lower, it also lacks a GUI desktop interface. We are familiar with CLI interfaces, but the convenience of the GUI interface for some tasks is too great. There is no built-in GPIO support either, which may be more difficult to handle installation of given its OS file manager is not the general apt package manager. Also, installation may cause issues, so sticking to the native Raspberry Pi OS will save time.

3.20.2 Computer Vision Framework Selection

OpenCV

OpenCV is a free and open-source library intended for real-time computer vision, with "real-time" referring to its ability to finish tasks within a predictable deadline [97, 98]. It is written in C and C++, but the library can be used in several languages, including C++, Python, and Java [99]. It can be run both on all major desktop operating systems (Windows, Linux, and MacOS), and it also has a special ability to run on iOS and Android [100].

OpenCV is mainly intended for image processing and computer vision, and it is optimized to perform fast for such tasks. Additionally, further speedup can be achieved through hardware acceleration with a GPU using CUDA [101]. However, OpenCV does not support machine learning directly.

While OpenCV is generally considered more difficult to learn than other libraries, the team is somewhat familiar with its setup and the level of functionality it provides.

Scikit-Image

Scikit-Image is another free and open-source library intended for image processing with the intent of usage in scientific computing and machine learning. It is written in Python, Cython, and C, so it is exclusively available to use with the Python language [102]. It can be run on all major desktop operating systems (Windows, Linux, and MacOS) [103].

Since Scikit-Image is meant for scientific computing and machine learning, it is not as optimized for regular image processing or for real-time computer vision [104]. It is also not made to take video feeds; however, there is a library named scikit-video that does do such processing [105]. While the library is considered fast in performing machine learning tasks, it does not actually support hardware acceleration using a GPU.

While performance is not as high as other libraries, Scikit-Image was made for usage in the sciences rather than in software engineering, it is accordingly made to be simpler to learn than other libraries to be intuitive to scientists with limited programming skills [104]. This simplicity may be advantageous to us to more easily communicate about the nature of code, but we are also not familiar with this library and have not made use of it before.

SimpleITK

SimpleITK is a free and open-source library intended for image registration and segmentation. Image registration is essentially the process of aligning two or more images that are of the same subject but may have been taken at different times, perspectives, or different sensors [106]. Image segmentation is the process of dividing an image into regions or segments of pixels, with the intent of indicating and labelling objects of interest [107]. It is primarily written in C++, but it is available for a broad range of programming and scripting languages, including C++ itself, Python, Java, R, C#, Lua, Ruby, and TCL. This makes it perhaps the most usable library across different languages [108]. It is available for all major desktop operating systems (Windows, Linux, and MacOS) [109].

Since SimpleITK is made specifically for image registration and segmentation, it is fast at image alignment, which could be useful for the C.I.P for production and analysis of PCB traces. During production of traces, the C.I.P may need to initially align or realign to an objective point in case of drift in position over time, which image registration may be able to produce how to move the printer head back to a correct position. After production of the traces, a large composite image of the PCB will be made, and it may need to be aligned to an image of the intended PCB for analysis of correctness. Image registration can help automatically transform the image of the produced PCB to the image of the intended PCB. Image segmentation is also helpful for identifying traces apart from the PCB substrate or other features that may be present on the PCB.

While SimpleITK appears very capable for image alignment tasks, the library appears not to be capable of any other form of image processing, so it would not be able to stand by itself as the sole image processing library. Additionally, there is no hardware acceleration using a GPU available for this library.

We are not familiar with SimpleITK and have not done much work in image registration or segmentation before, but SimpleITK is made to be a simpler form of the Insight Toolkit (ITK) for a broader audience, with the intended use of SimpleITK being in medicine.

Image Processing Toolbox

The Image Processing Toolbox is a paid library of image processing algorithms for MATLAB. It is freely available to students attending the University of Central Florida, but normally, it would cost $1600 per year to buy both base MATLAB ($1050 per year) and the Image Processing Toolbox ($550 per year) [110, 111]. This subscription service also provides complementary technical support. It is written in C, C++, and the MATLAB programming language, but it is only made for usage in MATLAB. It can run on all major desktop operating systems (Windows, Linux, or MacOS). However, MATLAB only specifically runs on Ubuntu, Debian, Red Hat Enterprise, and SUSE distributions of Linux [112].

As an interpreted language, MATLAB is generally slower to use than compiled languages, such as C or C++, especially when loops are used instead of vectorized operations. However, it may be optimized for image processing operations that use linear algebra, which is frequent. MATLAB can be sped up using GPU hardware acceleration [113].

We are not familiar with the Image Processing Toolbox in particular, but we are familiar with MATLAB in general and will not have to adjust to a new language. Some complication may occur in trying to couple MATLAB with other applications and languages, however.

Computer Vision Libraries Comparison and Selection

Table 38 - Computer Vision Library Selection

	OpenCV	Scikit-Image	SimpleITK	Image Processing Toolbox
Languages Written In	C, C++	Python, Cython, C	C++	C, C++, MATLAB
Languages Written For	C++, Python, Java	Python	C++, Python, Java, R, C#, Lua, Ruby, TCL	MATLAB
Operating System	Linux, MacOS, Windows, iOS, Android	Linux, MacOS, Windows	Linux, MacOS, Windows	Linux, MacOS, Windows

Performance	Fast for image processing	Fast for machine learning, slow for regular image processing	Fast at image alignment and segmentation	Fast for linear algebra
Intended Usage	Image processing, machine learning not supported	Scientific computing, machine learning	Image registration and segmentation	Image processing
Familiar	Yes	No	No	Yes
GPU Hardware Acceleration	Yes	No	No	Yes
Cost	Free (open-source)	Free (open-source)	Free (open-source)	$1600 per year (Base MATLAB and Image Processing Toolbox)

We chose OpenCV as the most viable library. Other than SimpleITK, it is the only library written purely in C and C++, and the only library that supports the main programming languages we are familiar with (C++, Java, and Python). Scikit-image and the Image Processing Toolbox are also written using Python and MATLAB, respectively. Both these languages are interpreted, and are considered to be slower than compiled languages like C and C++. We are also familiar with the OpenCV library itself, which cannot be said of even the Image Processing Toolbox. We are only truly familiar with the general MATLAB environment rather than the Image Processing Toolbox. OpenCV can be run on the widest variety of operating systems, including mobile operating systems. It only performs image processing, and it is not made for scientific computing or machine learning unlike scikit-image; however, neither of those capabilities are our intent with this library. We likely will perform image registration and segmentation, which is the specialty of SimpleITK. But OpenCV also has registration and segmentation capabilities, albeit it may not be as fast or tunable. It also has GPU hardware acceleration, which the only other library that has this capability is the Image Processing Toolbox. While the Image Processing Toolbox has advantages of familiarity and acceleration, we are concerned about MATLAB's connectivity with other programming languages and environments. The regular cost of MATLAB without a student subscription is also prohibitive to its usage outside UCF. Ultimately, OpenCV was chosen as the most versatile, cost-effective, and performant library.

3.20.3 Computer Vision Algorithm Selection

Image Subtraction

Image subtraction is the simplest computer vision technique, simply aligning the inspected board with a golden model and performs some sort of subtraction of images. There are two main forms of subtraction, traditional arithmetic subtraction and XOR. Arithmetic subtraction is simply subtracting the value of each pixel in an image by the corresponding pixel in the other image. It works well on grayscale images with varying depths of darkness. The XOR operation is a bitwise operation which simply takes the XOR of the pixel value in each image. It is more well fit for black-and-white images [114]. Subtracting these two images, the leftover pixels can indicate potential defects since the real PCB does not match the golden standard of the PCB. They can then be classified into potential opens or shorts [115].

The image subtraction approach has a lower mean average precision between 85% and 90%. The false positive rate is significantly high, being as high as 70%. The processing time is the lowest of the methods, being less than 10 ms. There is only one image needed, which is the golden ideal PCB. We are familiar with these basic operations [116, 117].

Rule-based Verification

Rule-based verification involves the computer vision logically seeing if the board follows design rules. While there are many design rules computer vision can verify, the design rule that is of interest to us is that there are no opens or shorts, which is the basic needed for true correctness. The kind of computer vision that handles this correctness is connectivity analysis, which checks that all pads that should be connected are connected and that pads that should not be connected are not. The copper is treated as a connected graph, where pads are nodes [118].

Rule-based approaches have a moderate mean average precision between 88% and 92%, and a moderate false positive rate between 15% and 25%. The processing time is high, taking 20 to 50 ms. However, there is no data needed. We are familiar with these approaches.

Deep Learning

Deep learning approaches include models that are trained on datasets of PCB defects. There are different types of models, including those that rely on object detection, semantic segmentation, and autoencoding. Object detection models include “You Only Look Once” (YOLO) models such as LPCB-YOLO and YOLOv8 [119, 120]. These models are trained by drawing bounding boxes around and labeling the defect as the appropriate type (short, open, etc.). Semantic segmentation models, such as U-Net or Mask R-CNN, classify every single pixel as part of the same segment of the image [121, 122]. The final approach is autoencoding, which is an unsupervised approach where the model learns what a functional PCB looks like [123, 124].

These deep learning approaches have the highest mean average precision of all algorithms at 96.9% to 98.8%, and a low false positive rate of less than 5% [125, 126]. If a GPU is provided, the processing time is 15 to 30 ms. However, the effort to set up a deep learning approach may require training 500 to 2000 or more labelled images to achieve the labelled accuracy [127]. We are not familiar with the use of models for identification, and it seems to be a steep learning curve.

Computer Vision Algorithm Comparison and Selection

Table 39 - Computer Vision Algorithm Comparison

	Image Subtraction	Rule-based	Deep Learning
Mean Average Precision in Detecting Defects	85% to 90%	88% to 92%	96.9% to 98.8%
False Positive Rate	<70%	15% to 25%	<5%
Processing Time per Board	< 10 ms	20 to 50 ms	15 to 30 ms (on GPU)
Data Needed	1 ideal PCB image	0 images (only rules)	500 to 2000 or more images
Familiar	Yes	Yes	No

We chose a rule-based approach, specifically the connectivity analysis variant, for our choice of algorithm. It is the most practical approach to achieve in the timeline of our project while maximizing mean average precision and minimizing false positive rate. While deep learning is the most precise and has the lowest false positive rate, it requires the use of a GPU to achieve reasonable processing times, and the Raspberry Pi's limited CPU and memory may take far too long to work realistically. The time to develop the deep learning algorithm would also be much longer, requiring a large dataset to implement the algorithm, and we are not familiar with deep learning in general, unlike a rule-based algorithm. Finally, we chose not to go with the image subtraction method because it is far too error-prone, with a greater than 70% error rate. Additionally, it requires an ideal image of a PCB, which is not available and only an approximation using a Gerber-to-picture conversion tool. Even if it is the least hardware-intensive, the rule-based approach is much more beneficial.

3.21 Embedded Programming Language Selection

We have chosen to work with the C and C++ programming languages. These languages are ideal for embedded programming because of their performance, dominance, and safety. For performance, C and C++ have several advantages. They are compiled, which is generally considered faster than interpreted languages [128]. They use manual memory management, which is more memory efficient over memory management that uses

automatic garbage collection (when freeing of memory is done correctly) [129]. Garbage collection is also nondeterministic, so C and C++ are also better for the determinism needed for real-time systems. For their dominance, C and C++ collectively make up 93% of embedded applications [130]. This sheer dominance naturally makes C and C++ have a much more developed toolchain for any microcontroller than other languages. Additionally, C++ has been trusted by safety-critical industries, such as space or defense [131]. Overall, C and C++ are a preferred choice for embedded systems.

3.22 Programming Integrated Development Environment (IDE)

3.22.1 Arduino IDE

The Arduino IDE is an IDE made for the Arduino microcontroller. It is good for Arduino-language projects and is geared toward beginners in embedded systems [132]. It supports multiple microcontrollers, including Arduino microcontrollers, ESP32, and STM32 [133, 134]. The IDE supports its own unique programming language, also called Arduino, and also C and C++ [135]. It does support C/C++ compilation for the MCU natively, but an empty Arduino programming language file has to be included in the project at minimum. Flashing firmware to microcontrollers is supported, as that is necessary for flashing to Arduino microcontrollers. There is also a debugging tool, but it only provides simple serial communication through UART. Outside of embedded purposes, the Arduino IDE does not seem to be useful for general software development, including computer vision software. We are not very familiar with the Arduino IDE although it seems to be very simple to use.

3.22.2 Visual Studio Code

Visual Studio Code (VSCode) is a general-purpose IDE that is not necessarily made for embedded systems development, but it has multiple downloadable extensions to extend its functionality to support a wide variety of microcontroller boards [136]. Extensions include PlatformIO, which is a framework which adds support for many microcontroller boards, and ESP-IDF, which is Espressif's official IoT development framework [137, 138]. With these extensions and other extensions to support non-embedded programming, VSCode can support many languages, including the major ones like C, C++, Java, and Python [139]. With Python supported, a computer vision program can be viably written. While it does not support C/C++ compilation for MCUs, firmware flash, or debugging natively, extensions also provide this functionality. For debugging in particular, PlatformIO provides the ability to use a SEGGER J-Link probe with a JTAG Interface or Serial Wire Mode Interface (SWD) [140]. We are familiar with VSCode.

3.22.3 Eclipse

Eclipse is another general-purpose IDE geared towards Java, but it has a plugin named CDT (C/C++ Development Tools) that is strong for embedded work [141]. This plugin is commonly used in industry for ARM-based CPU projects when working with embedded systems [142]. As such, Eclipse supports many programming languages, including C, C++, and Java. Eclipse also supports Python development through PyDev, it is a weaker

alternative to other Python-specific options [143]. Through CDT, C/C++ compilation for MCUs and firmware flashing are both supported. JTAG and SWD debugging are also available through this extension. We are familiar with Eclipse but mostly in the context of Java programming.

3.22.4 PyCharm

PyCharm is an IDE specifically made for Python. There is no apparent support for embedded in any way for this IDE. As such, there is no microcontroller support, no C/C++ compilation, no firmware flashing, and no debugging. We are not very familiar with PyCharm, but it seems advantageous for Python development on computers [144]. Additionally, OpenCV is very simple to write in Python.

3.22.5 Programming IDE Comparison and Selection

Table 40 - Programming IDE Comparison Table

	Arduino IDE	Visual Studio Code	Eclipse	PyCharm
Microcontrollers Supported	Arduino, STM32, ESP32	None natively (downloadable extensions)	ARM-based CPUs	None
Programming Languages Supported	Arduino, C, C++	Many (major ones include C, C++, Java, Python)	Many (major ones include C, C++, and Java)	Python
C/C++ Compilation for MCU	Yes	No	Yes	No
Firmware Flash	Yes	No	Yes	No
Debugging	Serial only	None natively (PlatformIO can control J-Link connectors)	JTAG, SWD	None
Familiar	No	Yes	Yes	No

Due to easy integration with GitHub as well as multiple language support for this part of the project it was decided to use Visual Studio Code as the IDE of choice for embedded systems development. While some installation and setup may be needed to enable work with embedded systems in VSCode, the frameworks it provides are more relevant to our work than Eclipse's CDT plugin, as we are not working with ARM-based microcontrollers.

For the user computer and Raspberry Pi 5 programming, we are going to use PyCharm and VSCode, with PyCharm being using on the Raspberry Pi 5 for computer vision and PyCharm/VSCode being used on the user computer for the development of the slicer.

Chapter 4 – Standards and Constraints

4.1 Standards

4.1.1 Hardware Standards

PCB design standards

The IPC-2221A [145] is a comprehensive set of standards PCB's should match or surpass in immediately after manufacturing to ensure consistent quality products to be used for devices through its lifecycle. This includes characteristics that allow for performance of a board without creating unknown issues, design for manufacturability and environment. This way PCB's that are built to follow this standard are put out with consistency of quality and little variance. Some of the important information laid out in the document include but are not limited to; conductor sizing, via design, electrical properties insulation material. Clearances are outlined to accomplish previously mentioned characteristics throughout the document.

Conductor spacing/sizing

The standard goes over various conductor sizes based on the class and weight of the conductor including the plating on the conductor that is allowable. Also the copper plating allowed for a conductor. The size of a trace as it goes between 2 vias in which they call "Beef-up or Neck-down". This sort of clearance even just generally is important to stop electrical pins jumping between each other. This can damage devices on other voltage levels or cause miscommunication from voltage level changes due to there being nearby current flow. The size of the conductor also allows for the safety of any heating effect that may come from enough current flow. This way between any part that meets the standard fires are exceedingly unlikely to take place.

This relates directly to this project as well, since we are laying 'conductor' onto a PCB and we want to lay that 'conductor' without causing issues in a circuit that it is used to create.

Via Design

Vias are taken into account on many level from through-hole to blind and buried. These different types of vias are used for different reasons. Thought the IPC-2221A clearly indicates what document can identify blind/buried vias so as to never lose them. Different shapes that the vias could take to inform current carrying capacity. Also for the consistency of fabrication of vias. Which in tern allow for consistency is in other pertinent electrical conditions, current capacity, Voltage drop, spacing requirements which allow for the many systems we have today and in the future to be built upon the brick that is the via.

Electrical properties

The goal of the PCB manufacturing standard as a whole is to provide a stable environment for circuits to exist. This is accomplished as outlined by the IPC-2221A through power distribution considerations such as the grounding scheme which in turn helps with many other noise and EMI issues. Another simple rule of thumb that the standard mentions is high frequency circuits to be kept close to the power and ground. Certain widths of a conductor providing more capacitance than another as well. All of these small considerations provide further performance and reliability for PCB's.

Insulating materials

As with many sections within the IPC-2221A They first layout the common and conceptual ideas that go into the design of that chapter. In this case Material selection in general which include but not limited to thermal stability, Dielectric constants, thermal coefficients categorically. all of these different material considerations are necessary for a reliable insulator but mainly the dielectric constant that requires higher voltage to breakdown. These many constants that are relative to the material usage showcase just how important it is to insulate the copper layer from outside electrical effects, provide rigidity and still have a workable part to build off of.

By following the IPC-2221A standard throughout the design it can be ensured that the PCB can be without issues that relate to the construction of the PCB. Conductor sizing, via design, expected electrical properties, insulating materials and other that were not directly mentioned provide a strong point to build off of.

Mechanical standards

NEMA Motor standards

All stepper motors follow NEMA (National Electrical Manufacturers Association) standard frame sizes. The project uses NEMA 17 motors, which specify a 1.7-inch (42.3mm) square mounting face with four M3 mounting holes on a 31mm diagonal pattern. This standardization ensures motors from different manufacturers are mechanically interchangeable, allowing vendor flexibility during procurement and replacement. The shaft diameter follows NEMA 17 specifications (typically 5mm diameter with flat), ensuring compatibility with commercially available couplings, pulleys, and lead screw adapters.

Linear Motion Components

The linear guide system uses standardized MGN series linear rails, an industry-standard design widely available from multiple manufacturers. MGN12 rails (12mm wide) provide the linear guidance for X and Y axes, offering adequate rigidity and load capacity for the lightweight print head assembly. The rail mounting hole pattern and carriage dimensions follow the published MGN specifications, ensuring compatibility with off-the-shelf components and mounting brackets.

Lead screws follow ISO metric thread standards (typically 8mm diameter with 2mm, 4mm, or 8mm lead). Standard lead screw nuts with anti-backlash mechanisms are commercially available for these thread specifications, simplifying mechanical assembly and maintenance. The standardized dimensions enable use of stock bearing blocks and pillow bearings for lead screw support.

Fastener Standards

All fasteners follow ISO metric standards—M3, M4, and M5 socket head cap screws and hex nuts are used throughout the mechanical assembly. This standardization reduces the variety of tools required for assembly and maintenance (hex keys in 2mm, 2.5mm, 3mm, and 4mm sizes). Metric fasteners are widely available globally and are the standard in European and Asian manufacturing, matching the origin of most 3D printer components. The use of standard thread pitches (0.5mm for M3, 0.7mm for M4, 0.8mm for M5) ensures compatibility with off-the-shelf nuts, washers, and threaded inserts.

4.1.2 USB PD

The USB-C standard is one of the more recent standards to be implemented, being recently required by the EU as of 2024. They published their standards around the date the law was passed in 2022 at the IEC which accepted proposals from the USB-IF, USB PD standard [146]. One of the portions of the USB-C specification is USB PD which are covered primarily. The PDF covers testing procedures of the standard and electrical responses expected mainly.

4.1.1 Communication Standards

I^2C

Inter-Integrated Circuit (I^2C/I2C/IIC) [147] is a communication protocol that is used to communicate between devices and is a popular protocol for many devices. It is popular on OLED displays, accelerometers, gyroscopes, and other devices. The I^2C protocol uses 2 wires for devices to communicate. I2C communication allows for multiple master/slave relationships where more than one device can be the master, and more than one device can be the slave. I2C uses 2 pins to transmit data between devices: SDA – Serial Data, and SCL – Serial clock. The SDA line is used for data to be sent and received by both the master device and the slave device. This prevents receiving and sending data at the same time. The SCL line is used by the master device to control the clock of all slave devices. Multiple masters can be used in an I2C protocol where the active master device takes control of the clock line and establishes itself by changing the SDA line from high to low first and then changing the SCL line from high to low. This signals all devices that the active master is taking control. When multiple masters are acting, they must first check if the SDA line was pulled low. When connecting more than 2 devices in the I2C network a pull up resistor must be used on the SDA and SCL lines to VCC. When the master is ready to send or receive data it will send a packet along the SDA line. This packet will first contain the address of the device that the master is trying to communicate with. When the address matches the slave's address it will send an ACK bit along the SDA line to acknowledge that it is on the network. The master will then start transmitting a data frame. After each

frame is sent the slave will send an ACK bit to acknowledge if it has received the frame. When the master is ready to stop transmitting data it will send a stop condition to the slave by switching SCL and then SDA to high. I2C offers some advantages such as a communication protocol such as only 2 lines needed, multiple master/slave support, and ACK/NACK bits to confirm data sending. Some disadvantages of I2C are its slower data sending rate than SPI and its data frame size limited to 8 bits.

Table 41 - I^2C Properties

	I^2C
Number of Pins Needed	2
Data Sending Rate	100kbps – 5Mbps (depending on the mode)
Synchronous/Asynchronous	Synchronous
Data Acknowledgment	Yes
Number of Slaves	1008
Number of Masters	Unlimited

SPI

Serial Peripheral Interface (SPI) [148] is a communication protocol used to communicate between different devices and is a popular communication protocol used for touchscreens. The SPI protocol offers the ability for multiple devices to communicate at once in a master/slave relationship where the master device is in control of the clock signal. 4 different data lines are needed in the SPI protocol: MOSI – Master Output Slave Input, MISO – Master Input Slave Output, SCLK – Clock signal, and SS/CS – Slave Select/Chip Select. The MOSI line is used for the master device to send information to the slave devices. Multiple devices can be connected in parallel to this line. The MISO line is used for slave devices to connect to the master device, and any number of slave devices can also be connected in parallel to this line. The SCLK line is used to synchronize the clock time among all devices in the network. The master device controls this line and shares it with all slaves. The SS/CS line is used to define which device the master is attempting to communicate with. All devices in the SPI network will receive the same information from the master device but will wait until their chip is selected to listen to the information coming in. There are two popular methods of determining the method of chip select. Either more pins can be used to have a specific pin tied to each slave device from the master, or the devices can be connected in a daisy chain. Using a daisy chain helps cut down on the number of pins needed but not all devices can support the daisy chain configuration. SPI offers some unique features as a communication protocol besides its pin configuration. SPI offers continuous data streaming, a simple slave addressing system, higher data transfer rates than I^2C, and the ability to send and receive data simultaneously. SPI however has

the disadvantage of more pins being needed, no data acknowledgement, and no parity bit checking [149].

Table 42 - SPI Properties

	SPI
Number of Pins Needed	≤ 4
Data Sending Rate	Up to 10 Mbps
Synchronous/Asynchronous	Synchronous
Data Acknowledgment	No
Number of Slaves	Theoretically Unlimited [149]
Number of Masters	1

UART

UART (Universal Asynchronous Receiver/Transmitter) communication is used primarily in serial communications, commonly for programing microcontrollers. The UART module converts parallel data on a controller to serial data to send to the receiving device [150]. Since UART is asynchronous rather than having a clock, signal data is sent using only start and stop bits. This keeps the number of pins needed to only 2 so that both controllers can send and receive data. The two pins that are used are called Tx, the transmission line, and Rx, the receiving line. The Tx pin of one controller is connected to the Rx pin of the other and vice versa. Though there is no clocking in a UART communication there is still a transmission rate that both controllers need to agree on. This is called the baud rate and is the number of bits per time unit [151]. The baud rate can only differ by about 10% between devices [150]. To send data between devices the UART module first takes in the parallel data from the sending device. The UART module then adds a start bit, and optional parity bit, and then a stop bit. The Tx line from the sending module is then pulled low to indicate a starting transmission. The receiving line on the other module then starts reading in the data at the shared baud rate and converting it back into parallel data for the receiving device. The parity bit is used to verify if any data has been changed over transmission but is otherwise discarded. To stop the transmission the sending UART will then pull its transmission line high again. UART offers some advantages such as only needing 2 wires, no clock signal needed, it can be sent at different rates, the data packet size can change when both devices agree. The biggest disadvantage of UART is that only 2 devices can communicate at once.

Table 43 – UART Properties

	UART

Number of Pins Needed	2
Data Sending Rate	Up to 115200 baud
Synchronous/Asynchronous	Asynchronous
Data Acknowledgment	Yes
Number of Slaves	1
Number of Masters	1

USB

USB (Universal Serial Bus) is a serial protocol similar to UART but allows for multiple slave devices and only one master device [152]. While there are a variety of connectors for the USB standard at the most basic level they all follow the same simple data transmission protocol. To transmit data a twisted pair of wires is used to send data. D+ and D- are a pair of differential wires that use NRZI (Non-Return to Zero Inverted) encoding to send their data. NRZI is an encoding concept where a change in data represents a 1 and no change represents a 0. USB also has a variety of modes/states along with its two wires to indicate that data is being sent, what data is being sent, and if it is a low, high or full speed device. USB can determine if the device is high or low speed by adding a 1.5k ohm pullup resistor to the D+ will declare it a full speed device. If the pull up resistor is added to the D- then it is a low-speed device. To go fully in depth on USB and all of the variants and use cases could be its own report but this is just the basics of the communication protocol that have become a world standard.

Table 44 - USB Properties

	UART
Number of Pins Needed	2
Data Sending Rate	Up to 10 Gbps
Synchronous/Asynchronous	Asynchronous
Data Acknowledgment	Yes
Number of Slaves	127
Number of Masters	1

CAN

CAN (Controller Area Network) is a protocol widely used within the automotive industry but has found uses in other fields due to its ability to easily add and remove devices from the network. CAN is another asynchronous communication protocol but does not feature any one device in control of the network [153]. The CAN protocol uses a pair of twisted wires to send data along. CANH – Can High, and CANL – Can Low. They are connected at each end of the CAN wire using a pair of 120-ohm resistors on each side to prevent signal reflection. The signals are sent along the lines using a differential mode to prevent signal noise. By comparing what is read from CANH and CANL it can be determined if a 0 is sent, approximately 2 volts, or if a 1 is sent, approximately 0 volts. To connect a device to the CAN the controller will connect to a CAN controller using its Tx and Rx pins, since it is an asynchronous signal. The controller will connect both pins to their own signal differential converter and then both the CANH and the CANL lines will be connected to both differential converters. Since the CAN allows for hot-swap connections it acts as a broadcast network. This means that all devices will hear the same messages. Data is sent along in frames similar to other serial protocols with a start signal, the data packet, and the end of communication signal.

Table 45 - CAN Properties

	CAN
Number of Pins Needed	2
Data Sending Rate	Up to 1Mbps
Synchronous/Asynchronous	Asynchronous
Data Acknowledgment	Yes
Number of Slaves	Unlimited
Number of Masters	Unlimited

4.1.2 Software File Standards

Gerber File Standard

Gerber Commands

Gerber Files are the standard file output for PCB design softwares such as Fusion 360, Altium, and KiCad. The Gerber standard [154] is used to manufacture PCBs in industrial purposes. The Gerber standard relies on a series of standard commands and format elements for PCB softwares to output that can be understood by any computer/software that is used in PCB manufacturing. Below is an example list of standard Gerber commands:

Table 46 - Gerber Command Examples – Reproduced with permission from Ucamco

Command	Long Name	Description
G04	Comment	Creates a readable human comment without affecting the image
FS	Format Specification	Sets the coordinate format – number of decimals
AD	Aperture Define	Defines a template-based aperture and assigns a D code to it.
D02	Move Operation	Moves the current point to the coordinate in the commands without creating an object
G01		Sets linear/circular mode to linear
G36		Starts a region statement which creates a region by defining its contours
SR	Step and repeat	Open or close a step and repeat statement
TF	Attribute on file	Set a file attribute
M02		End of the Gerber file

Gerber files use these types of commands to create vector images from each PCB layer. Each file specifies a single image (layer) and is complete, so it does not need any external sources to be interpreted. Each file is written as a stream of commands that are ordered to create the graphical objects that form the final image. The Gerber file uses ASCII characters to create human readable and printable files. Below is an example of a Gerber file that creates a 1.5 mm diameter circle centered on the origin.

Table 47 - Example Gerber File – Reproduced with Permission from Ucamco

%FSLAX26Y26*%	Format Specification:
	Leading Zeros Omitted
	Absolute Coordinates
	Coordinates in 2 integers and 6 fractional digits
%MOMM*%	Set units to mm
%ADD100C,1.5*%	Defines an aperture, D100, to a circle of 1.5 [units]

D100*	Sets the current aperture to the created D100
X0Y0D03*	Creates a flash object using the current aperture moving the point to the origin and then creating the flash object at the point
M02*	Ends the Gerber file.

Gerber Syntax

Besides a set of commands the Gerber standard has a set syntax that defines qualities of all Gerber files. The file is expressed in UTF-8 Unicode. The new line characters can only be at the end of words or commands (note they are only needed for human readability). Characters * and % are delimiters and can be only used within correct syntax statements. Gerber files are also case sensitive with commands written in upper case only. Commands also follow a syntactical style where free characters build up to words then commands which include word commands and extended commands. Free characters are all characters except for * and %. A word then builds up to any [free characters] + *. A word command is just a [word]. Word commands start with a command code (G, D, or M) followed by a positive integer such as G04 and a star at the end of the command *. Extended commands are identified by the first 2 characters for the command code then any further parameters specific to the code. The command is then wrapped in a pair of percent symbols such as %FSLAX26Y26*% where is FSLAX26Y26* the word then wrapped in %%. There are also several data types in the Gerber standard. Integers must fit in a 32-bit signed integer. Decimals must fit in the IEEE double standard. Strings are any UTF-8 characters except for * and %. Fields follow string syntax with the additional restriction that a field cannot contain a comma. Names are used to identify things such as attributes in Gerber files and are limited to ASCII characters. Names can contain upper/lower case ASCII letters, underscores, dots, dollar signs, and digits. Names are between 1 to 127 characters long and names beginning with a `.` are only for standard names in the Gerber standard. User defined names cannot begin with a dot.

One important aspect of the Gerber standard is the fact that the file only specified 2 dimensions of movement. When the PCB is viewed from the above the X axis runs from left to right and the Y axis runs from bottom to top. It should also be noted that the positive rotation is counterclockwise when viewing the image from above. The origin of the image can be placed anywhere but it is suggested that the origin is placed on the bottom left to keep all coordinates positive. Since each layer on a PCB is described using 1 Gerber file each, they must all use the same coordinate system to allow layers to line up.

Gerber Attributes

Another key part of Gerber files are the attributes. Attributes are used are used to add metainformation to the Gerber file. They are used to describe information about the file or features within file. This can include where the file is in the layer structure, or what the function of a pad is. Within the context of the project this information will be helpful when parsing the Gerber file to determine where crossover ink needs to be added or where it is

intended to have a via. The attributes do not affect the image but are used purely to provide meta data about the file. File attributes are used to attach meta information about the entirety of the file. Aperture attributes are used to add information about an aperture or region. Objects created by the aperture will inherit its attribute information. Object attributes add information to the object directly. Below is a sample list of attributes.

Table 48 - Gerber Attribute Types – Reproduced with Permission from Ucamco

Name	Usage	Attached to
.FileFunction	Identifies the file's function in the PCB such as the top or bottom layer	File
.DrillTolerance	Tolerance of drill holes	Aperture
.P	The Pin number and reference descriptor of a component pad on an outer layer	Graphical Object

Attributes are also defined by 2 types. Standard attributes are defined by the Gerber standard and can impart their information to any Gerber related application. User attributes are defined by the user to add custom meta-information.

PCB Fabrication and Assembly

File Structure

To create a PCB the set of Gerber files used to create the PCB can be in a directory or a combined into a zip file.

Mandatory Attributes

Since a Gerber file defined a 2D layer image each file must have the following attributes which define the layer and where it fits into the structure: FileFunction, FilePolarity, SameCoordinates.

Alignment

In addition to those attributes each file must have a 1/1 scale and alignment with every other file to properly create the PCB.

Pad Information

The fabricator must also be able to distinguish between pads and other copper since there is typically a higher tolerance for pads. All pads must be flashed to transfer information about the location and shape of the pad.

Profile Information

The PCB profile is information about the contour of the PCB or being a set of closed draws that function the same as the contour. This profile information must be contained in a

separate file for fabrication, but other layers may have a replica of the profile as long as the aperture has the .AperFunction, Profile attribute.

Drilling Files

Drill/rout files represent which material to remove (these files will not be needed in this project).

Drawing/Data

Gerber files will contain 2 types of images: Drawings used for a drill map to be viewed by humans. Digital data representing copper, solver mask, drill points, the file legend which is designated for processing by the CAM software.

CAD Netlist

The CAD netlist describes how component pins are connected. Pins are identified by their component reference and pin number/name. Nets are identified by the net name. The netlist is used to link components pads to nets.

Component Data

Component information is information about the components that are placed on the top and bottom of the board. They are stored on dedicated Gerber layers and used to transfer information from CAD to manufacturing where components will be auto placed.

G-Code Standard

The G-code standard is based on the NIST RS-274 [155] standard. G-code, as it is known today, is a group of languages based on this original standard. There are several flavors, but they all follow the same general rules.

Codes

The G-code language has a series of codes that are used to control movement, general program flow, and tool control. These codes are split into G-codes, M-codes, etc.

G-Codes

G-codes are primarily used for movement such as the code **G28 return to home** or **G20 inch system selection** these codes can be combined with parameters to modify them such as adding an x/y coordinate to G28 to add a first movement position to avoid collision.

M-Codes

M-codes are used for program control such as **M0 program stop** or **M6 tool change**. These codes can also be combined with parameters to modify their function such as selecting which tool to change to.

Other Codes

Other codes can be used such as F – set feed rate, S – set spindle speed, T – select tool. These codes can all be combined with parameters to modify their function.

4.2 Constraints

4.2.1 Environmental Constraints

The environmental constraint of this project and the project sustainability are an important consideration in this project design. While the additive manufacturing method can lead to less material waste in comparison to subtractive manufacturing which can lead to material scrap and cutoff it also leads to more plastic waste in the form of discarded ink containers. This creates an environmental tradeoff. By using reuseable methods such as refilling and using the ink containers it could eventually lead to less waste in comparison to the more traditional PCB design techniques, but the impact of the ink manufacturing can also be considered. Subtractive manufacturing on the other hand never needs to have the drill head replenished, only drill bits replaced when they break. Copper can also be reused and recycled when part of a board is finished being milled. Overall though this additive manufacturing process does create new innovations and could eventually lead to more environmental sustainability through the ability to design products locally rather than needing them to be externally manufactured and transported to the designer. It can also lead to less waste by reducing the iterations of PCBs needed to be designed in order to complete a design.

In addition to the environmental constraints of the project itself to be more sustainable parts are being reused from the donated Ender 3 shell when possible as well as parts are being designed and 3D printed inhouse to prevent the need for 3rd party manufacturing. By 3D printing components less material is needed when infill is reduced while still maintaining the strength of the part leading to less waste being generated.

4.2.2 Economic Constraints

One of the biggest constraints in designing this project is the economic considerations. In our research we found the most similar platforms cost multiple thousands of dollars in investment. This was also often for the base unit not including any further functionalities such as other tool heads or materials. There is also an ongoing cost constraint to the project in the form of purchasing more supply to continually produce PCBs. In order to produce the PCBs both a substrate and an ink material must be purchased. The substrate for this project will be FR-4 or some similar rigid material which will require constant purchasing for creating circuit boards. Looking on Amazon at the time of this writing, a FR-4 base with a volume of 335 x 300 x 2 mm^3 sells for $22.95 [156]. While this substate can be used for multiple smaller boards it is still a constant cost that will need to be considered when using the C.I.P. In addition to the constant ongoing cost in substrate material there is an even more considerable cost when considering the ink material choices. All ink options on the Voltera store (with the exception of the test ink) cost $99 per syringe [157]. This represents another significant investment into this project. In order to make 2-layer functional boards there is a minimum of a conductor ink and an insulator ink needed to be

purchased. This $200 additional cost along with the ~$25 cost for the FR-4 base, leads to almost $230 needed to just run the C.I.P in addition to the budget considered for actually creating the printer. This recurring cost while not as significant as the initial cost to design the printer can cost more in the long term and planning for that cost should be considered in the design. While this project is still designed with the goal to less than half the cost of the comparable Voltera V-One and Nova it is still not an insignificant sum at an estimated $1,300 for printer design and assembly.

Due to the consideration of economics constraints, cost saving measures are being implemented such as not redesigning the base printer and using the one donated by Dr. Weeks and reusing components the came with the printer when possible. Additional components are also being 3D modeled with the intent to 3D print where possible. This is being used to reduce component costs such as housing for the head unit. By printing out of filament it reduces the material need and appropriately the cost of manufacturing additional components to the C.I.P. It is also being explored whether testing can be done using the speedball ink sold by Voltera or solder paste in the place of ink to test features such as extrusion and path printing. This will help reduce the amount of conductive and insulative inks needed for testing the project and will help increase the use time of each vial of the more expensive inks.

4.2.3 Time Constraints

Another of the biggest constraints the project faces is the time constraint. The time constraint is the biggest limiting factor in the complexity of this project and its scope. Due to the timeline of Senior Design 1/2 being shorter than standard due to the senior design 2 period taking place over summer there is less time than standard for the project to be designed and built. This leads to the need for cutting back project scope to something manageable in the shorter semester. This is a large part of why functions such as solder pasting are being moved to stretch goals. While adding solder paste functionality might not be too much of a stretch in comparison to the needs for adding crossover trace functionality adding that complexity is also infeasible in the consideration of the shorter semester and how much needs to be designed on the printer. Adding other functions like milling while worth considering on a longer-term project to expand the capabilities of the project are also not worth considering in the time period given due to its completely different style of manufacturing. Due to the project considerations of scope and time less of the project can be designed from scratch and modification of open source designs will be more feasible in the project timeline. Most notably in the firmware, by using Marlin as the firmware and modifying it time can be cut from being needed to design motor movement and G-code interpretation and instead focused on modifying its functionality to accommodate the instructions from the slicer to involve tool head changing and the changes to extrusion needed to properly print with inks. Also, it provides a good base for modifications to the hot bed for curing as well as modifications to add a touchscreen interface.

Due to the time constraints besides project goals the timeline must also be tighter such as the writing of this report due to the snowballing effect of falling behind. This is a further constraint and risk due to project members also having work and other classes during the

senior design period. Due to those constraints, it is of utmost importance for the group to be able to align their schedules and work ahead.

4.2.3 Equipment Constraints

4.2.4 Safety Constraints

4.2.5 Manufacturability Constraints

4.2.6 Ethical Connstraints

4.2.7 Sustainability Constraints

Chapter 5 – Application of AI/LLMs

For this chapter we decided to apply Claude, an Anthropic product, and ChatGPT by OpenAI. We have our specific conversation referenced here [158].

Large Language Models (LLMs) are the specific technology that all of these 'AI' chatbot products actually specifically are. These models have some trade-offs that can be hard to identify because of the nature of user interaction with them. This technology operates like a black box to the user, giving responses that appear to be logical but with no way of parsing why. These responses may be useful also, so we decided to make some case studies on the usefulness and limitations of AI and LLMs for this project

Before we can get into each case study for our project, we must first examine the limitations of AI/LLMs. The biggest limitation of these technologies are their reliance on data sets to reason about prompts. If the LLM is not trained on a data set specific to what is needed for your research, then it can make it hard to get specialized information. Generally, these tools are useful for cursory overviews of a topic or helpful supplements for a general google search. LLMs can provide tailored results to a search and add context of why an option was selected for your viewing.

LLMs are also used frequently in programing. When attached to a project such as when using GitHub copilot, the LLM of choice can read an entire program and all the files contained within it and map out how they connect to each other. This can simplify bug catching and assist in coding, but as before, the data set it is trained on will impact how skilled it is at the task. If the LLM is not as trained on a programming task, then it is very easy to get guided into a programing rabbit hole. This can compound issues with development because typically by the time one realizes he or she has been trapped in the rabbit hole, the code is so modified and mangled from the LLM that it can be almost impossible to tell what is the original code are and how to restore this code to the original state unless it is being tracked as commits by a version control software, such as Git. Generally, these limitations, unless hyper-specialized, prevent an AI model from replacing specific engineering knowledge and theory but they can be useful for quickly conducting research and bouncing ideas off of.

Pros of AI/LLM Use:

- Can make cursory research much faster
- Can reveal options not otherwise considered
- When used with a specialized dataset can become much more accurate than a human
- Can consider factors and make connections faster than a human
- Capable of searching the entire internet
- Can make programing more accessible

Cons of AI/LLM Use:

- Does not always have specialized knowledge
- Prone to hallucinations
- Can feed misinformation or incorrect information
- Prone to just agreeing with the user even when they're incorrect
- Can lead itself into a rabbit hole

The following case studies examine the use of individual AI prompts and their responses. This is then considered by how it helped or harmed the research and report writing process.

5.1 Case Study 1

When searching for an MCU, we started looking for the sets of MCUs we currently know and have listed for comparison. We searched for some specifications on our own, but we then prompted AI in order to check some of the foot work we had already done. The conversation is referenced in Appendix E pg. 168.

How this affected our choices:

We recognize that AI is best used for identifying common solutions, but we have also seen many anecdotes that usage of AI is more effective if we cross check the outputs. So our goal of this case study about was to check if it is effective in providing useful information about common MCUs for our project. However, the results were interesting. We received responses about higher-end MCUs for our purpose, but we were thinking about lower-end MCUs and not higher-end ones. So this will make us double check the load that we expect on our MCU's processing, though the pinout is fairly unshaken since we have cross checked many peripherals at this point. We do not need 80 pins in total. This initially steeled our thought process of initially starting with an ESP32 family board. We will likely shoot for a higher processing power variation assuming nothing definitive comes after checking the processing requirements.

5.2 Case Study 2

When attempting to write on USB standards, we found that the International Electronics Commission (IEC) had a paywall for the standards document. This was a 300+ dollar charge, which seemed unrealistic to access as an individual and seemed more likely to be made for industry. So instead of searching directly around with different phrasing on

Google like we might have in the past, we decided to ask Claude to source the standards document from somewhere.

The response to the prompt was actually really helpful; it assisted me in finding the usb.gov website. This website covered topics of USB compliance, tooling, and development. This site included some documentation on USB-C Power Delivery (PD) standard that we were looking for. Although the site is not from the IEC, the website does include reference to the IEC standard we were looking for. But the document that we found when we searched the website did not include reference to USB-C PD being part of the IEC standard directly. However, we also noted part of the AI's response cites an article that the IEC accepted the USB-IF's proposal for its USB standard, and USB-IF access is free. So it is inconclusive if Claude found the document we planned to reference, though this might be because it is impossible to access openly without paying the IEC for the standards. Regardless, this document was a good analogue to the actual PDF of the standards since it was proposed and accepted anyway, albeit revision may have happened that are not able to be witnessed.

How this affected our choices:

This gave us enough confidence to feel like we could write about a standards section on USB-C PD because we were able to source a standards document that we wanted to reference at least laterally. Analyzing the document, it specifies an implementation that is likely to be in the IEC standard. Though one could argue that the LLM may be misreading the document and applying to USB-C PD, we feel it was a good starting point that we do not think we would have found on my own. The naming convention of that organization made it seem more like a development board rather than a group that is submitting to governments for their standards nationwide on the face of it. We think it is possible that Claude might make things more searchable, but it may also be creating its own set of blind spots that have not come to fruition to see without further use.

5.3 Case Study 3

When asking ChatGPT to fill out a structured table, the process did not work as expected. The task involved completing missing entries in a technical comparison table while keeping the existing answers unchanged. However, ChatGPT failed to properly update the requested column and often returned with responses that did not directly address the missing fields. This made it difficult to progress, as the portion of the table that needed to be modified remained unchanged.

Another issue was the relevance of the information provided. Instead of inserting specific values into the correct cells, ChatGPT sometimes gave general descriptions or explanations that did not match the table format. While the information itself could be somewhat related, it was not presented in a way that could be directly used, requiring additional effort to extract or reformat it into the table.

Formation also became a challenge throughout the interaction. The responses did not consistently follow the structure of the original table, leading to confusion about where the new information should be placed. Even after multiple attempts to clarify the request, the

model struggled to align its output with the expected format. Overall, while ChatGPT was useful for general understanding, it was not effective in accurately completing a specific column within a structured table. The conversation is cited in [159] and in Appendix E pg. **Error! Bookmark not defined.**.

How this affected our choices:

This limitation directly affected our choices during the project. Since ChatGPT was unable to reliably fill in the column, we could not depend on it to quickly provide accurate technical data. As a result, we had to manually research and verify the missing information ourselves, which increased the time and effort required. Additionally, because the AI did not produce usable table entries, we decided to rely on it only for explanations or summaries rather than for structured data completion. This experience reinforced the need to carefully evaluate when and how to use AI tools in tasks that require precision and strict formatting.

5.4 Case Study 4

After looking at various websites when attempting to learn more about motor drivers and in order to practice more use of AI models in our research, it was attempted to use an AI model to generate a simple explanation of motor driver types as well as generating a comparison table to use instead of manually creating one.

The conversation is cited in Appendix E pg. **Error! Bookmark not defined.**.

How this affected our choices:

By using AI to read a website already given, it also pulled sources from elsewhere on the internet but kept them related to the original site. This made learning about the motor drivers much simpler and it was possible to ask for a more direct explanation of the exact differences between the two driving technologies rather than relying on a single website and trying to decipher its meaning of the differences between motor drivers. By asking for the table, which was used in this report, it was possible to consider elements between the two that would not have been included otherwise. This led to a more through comparison as well as freeing up time to work on other elements of the report rather than spending time simply creating a table and spending time going back between sources to fill it in.

5.5 Case Study 5

When searching for an appropriate camera for the capture of the PCB, we decided to ask Google's Gemini LLM about what camera it thinks would be appropriate. The conversation is cited in [160] and is listed in Appendix E pg. 190. I decided not to prompt that I was considering between macrophotography and photomicrography and keep the consideration broad. The answer was interesting, but it was not very useful. It decided that either you can use a hobbyist DSLR camera or a clip-on macro lens for your smartphone.

The budget DSLR was clearly bulky, showing the LLM's lack of ability to visualize the small form-factor needed. It is also unclear how the camera would attach to the system.

The macro lens may be useful, but adding a smartphone would be impractical cost-wise for this project. Additionally, it would be again unclear how the smartphone would attach to and interact with the system.

How this affected our choices:

This conversation did affect our choices by reinforcing that the choice for camera technology was between photomicrography and macrophotography as the two practical options. This conversation also introduced the idea of using a phone macro lens, which is relatively cheap compared to other macro lenses found during research, to make macrophotography a practical and affordable option. While we did not ultimately choose macrophotography, we considered it more heavily as a truly practical option, especially with the risks of microphotography causing vignetting and distortion. This experience showed that while an LLM cannot always think through a full solution for someone, it can open up possibilities when someone applies the knowledge it does provide.

5.6 Case Study 6

Continuing from case study five, we decided to ask a more specific query specifically comparing photomicrography and macrophotography. The conversation is cited in [161] and listed in Appendix E pg. 195. Rather than saying which one is better, it decided to break down their individual strengths. It suggested that macrophotography gave a "big picture" of the board whereas photomicrography can diagnose small issues. It suggested that macro photography has a much higher resolution, which was new information to me. But the LLM may be drawing on our previous conversation about PCB photography, thinking that I am disc using about a handheld macro photography camera. This sort of pattern where AI not only draws on previous statements in the conversation but on previous conversations shows that talking to it may slowly bias it over time.

How this affected our choices:

This conversation pushed me towards the use of a microscope camera as it could reveal things in much more detail, albeit it suggested that stitching pictures together will be a "massive headache". It reinforced my view that macrophotography captures a larger area, but it loses detail. And in general, much of the information that was provided by the AI was mostly already known to me, including that the field-of-view and depth-of-field being much better but the lighting being worse. It provided new insights about how to deal with lighting, such as using a polarized filter to reduce glare (much like how sunglasses work).

5.7 Case Study 7

When asking ChatGPT about what conductive inks and what nozzles I should use to print traces on PCB substrates, the process did not work as expected. The task involved providing examples of conductive ink types and nozzles that would print traces on PCB substrates. However, ChatGPT failed to properly provide the requested information and often returned with responses that did not directly address the information requested. This made it difficult to progress, as the requested information was not entirely correct.

Another issue was the relevance of the information provided. Instead of providing relevant nozzles, ChatGPT sometimes provided general response about an Inkjet-style nozzle. While the information itself could be somewhat related, it was not presented in a way that could be directly used, requiring additional effort to look up the proper nozzles.

Formation also became a challenge throughout the interaction. The responses did not consistently follow a structure that made it easy to read and understand. Even after multiple attempts to clarify the request, the model struggled to align its output with the expected outcome. Overall, while ChatGPT was useful for general understanding, it was not effective in accurately looking up what conductive inks and what nozzles I should use to print traces on PCB substrates. The conversation is cited in [162] and in Appendix E pg. **Error! Bookmark not defined.**.

How this affected our choices:

This limitation directly affected our choices during the project. Since ChatGPT was unable to reliably provide the appropriate conductive inks and nozzles, we could not depend on it to quickly provide accurate technical information. As a result, we had to manually research and verify the missing information ourselves, which increased the time and effort required. Additionally, because the AI did not produce usable information, we decided to rely on it only for explanations or summaries rather than for looking up materials. This experience reinforced the need to carefully evaluate when and how to use AI tools in tasks that require research of materials.

Chapter 6 – Hardware Design

Chapter 6 Hardware Design (15-20 pages)

- subsystem block diagram, schematic diagram, architecture, structural illustration, etc.
- MUST include accurate schematics of project/prototype, not generic reference schematics

NOTE: failure to present proper schematics will result in at least one letter grade deduction

6.1 MCU sheet

The STM32H7 MCU is connected to our peripherals and status lights/indicators. The way the team breaks it down is through each sheet. The peripheral sheet is going to connect each of the devices in the system that are not within their own system. This includes linear switches, the LCD, status LED's and so on.

The motor controls sheet which will send control signals to the drivers and set the modality of stated drivers. The driver will connect its output to the motor sending its pulses based

on the MCU's connections. This is stacked up 4 times for each motor that is within the system.

The Head sheet named for it being the point where the ink is actually dispersed. This sheet contains all of the devices that are physically located on the gantry away from the mainboard. This is because we have to breakout anything being sent over to some output connector in order for it to be connected to the mainboard. These connections are also likely to be wrapped in order to stop them from being tangled. The parts that we would be connecting includes the MCU that would identify the head module, the ink dispensing motor and the Z-height sensor.

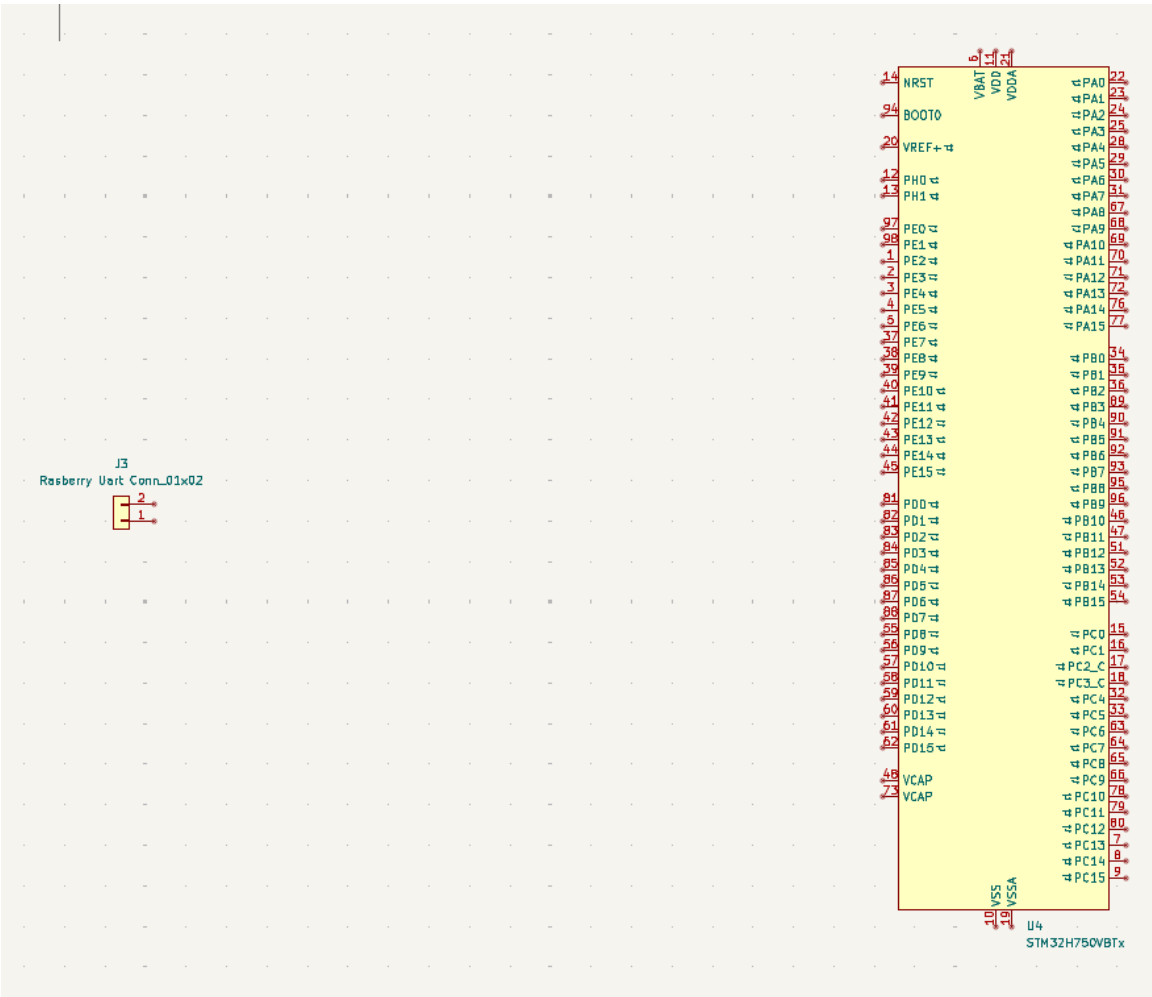

6.2 Peripherals sheet

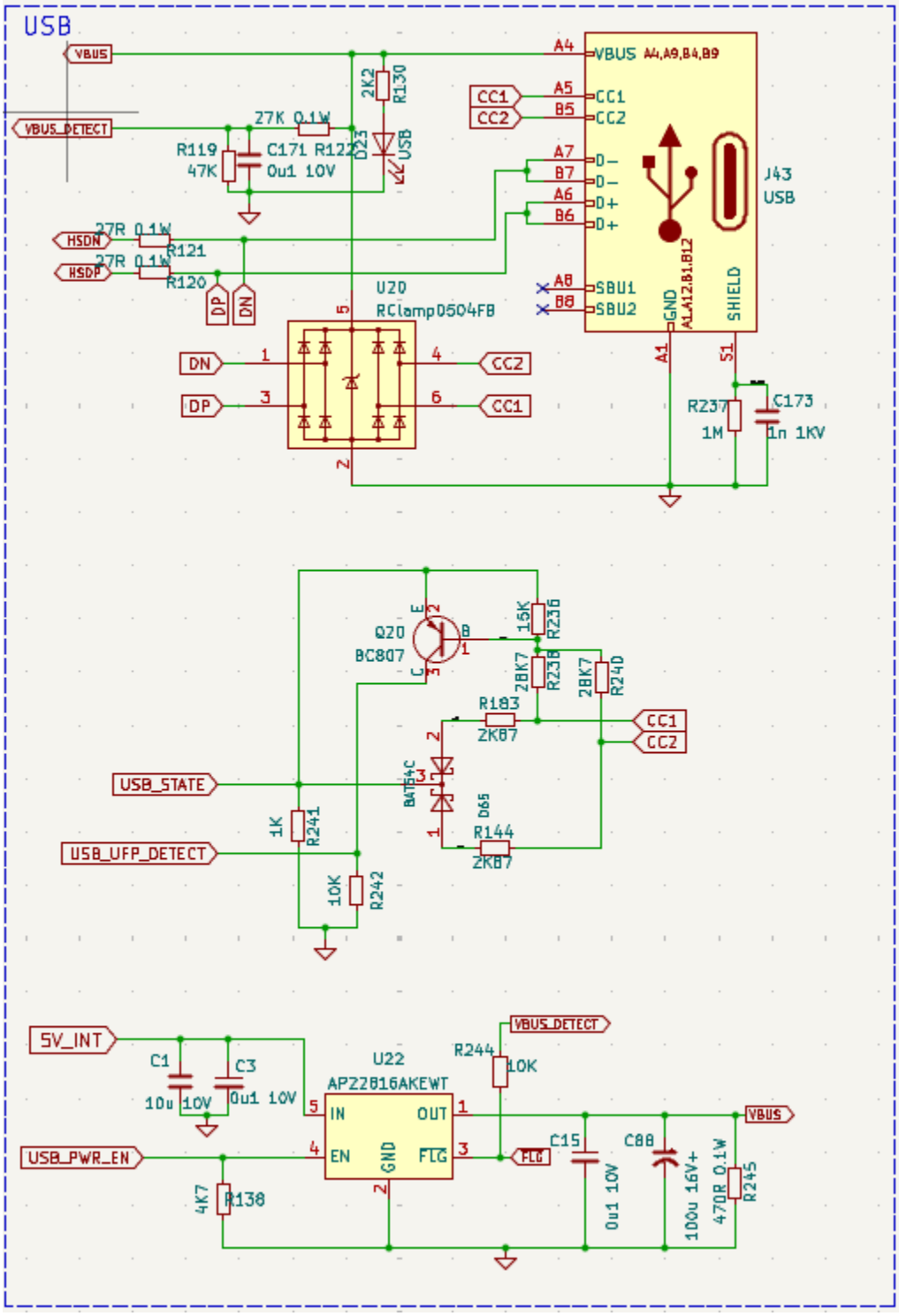

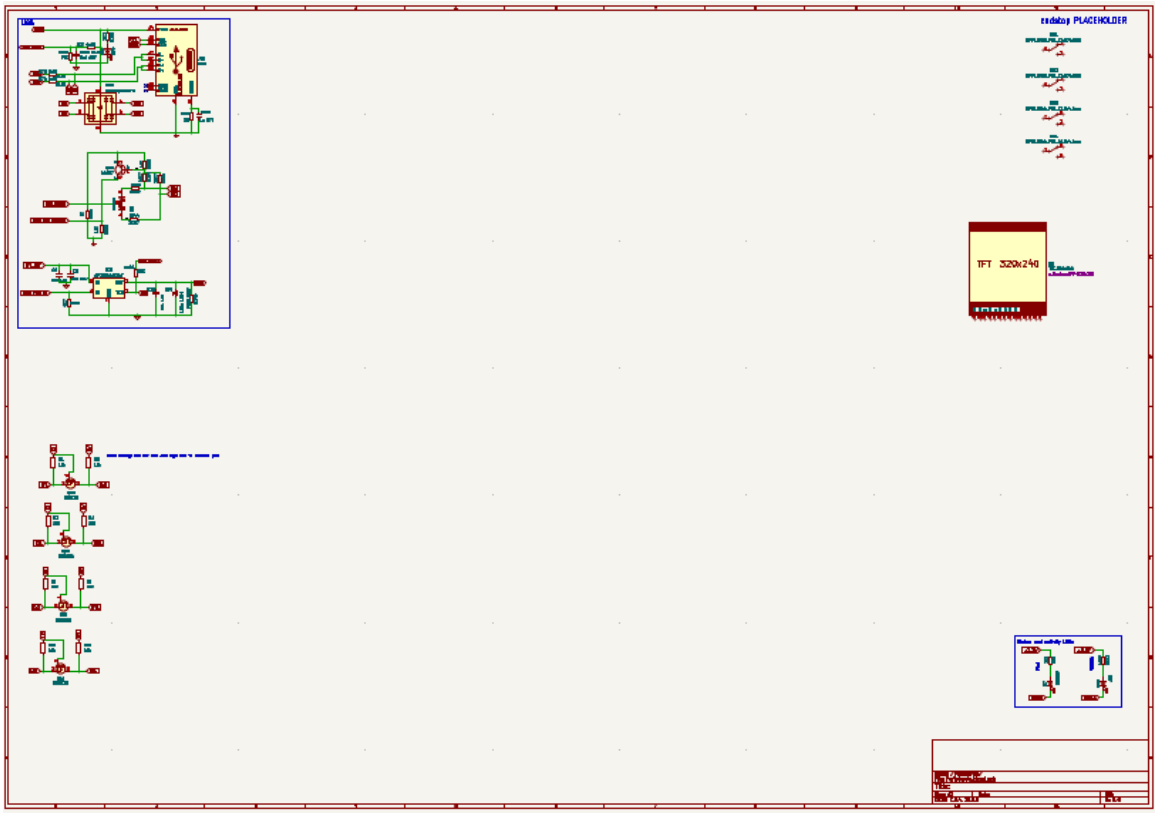

6.3 Motor Driver Sheet

The motor controls sheet outline the motor driver and its connection to the MCU and the stepper motors themselves. The implementation of the DRV8825 to the stepper motor are the phases of the coils in the motors labeled A1-A2 and B1-B2. Since we are retrofitting to currently crimped connections to our stepper motor, we want to ensure that these phases line up on our JST connector. The logic side of the motor driver is driven at [insert pin] selecting the different settings from mode, dir and step.

The supply that is meant to power the stepper motor is directly from the LRS-350-24 output. A JST connector is added for the connection to the motor coils to the stepper motor. A separate standalone is made in order to test the driver before being fully implemented into the mainboard as well. That version is shown in the schematic below.

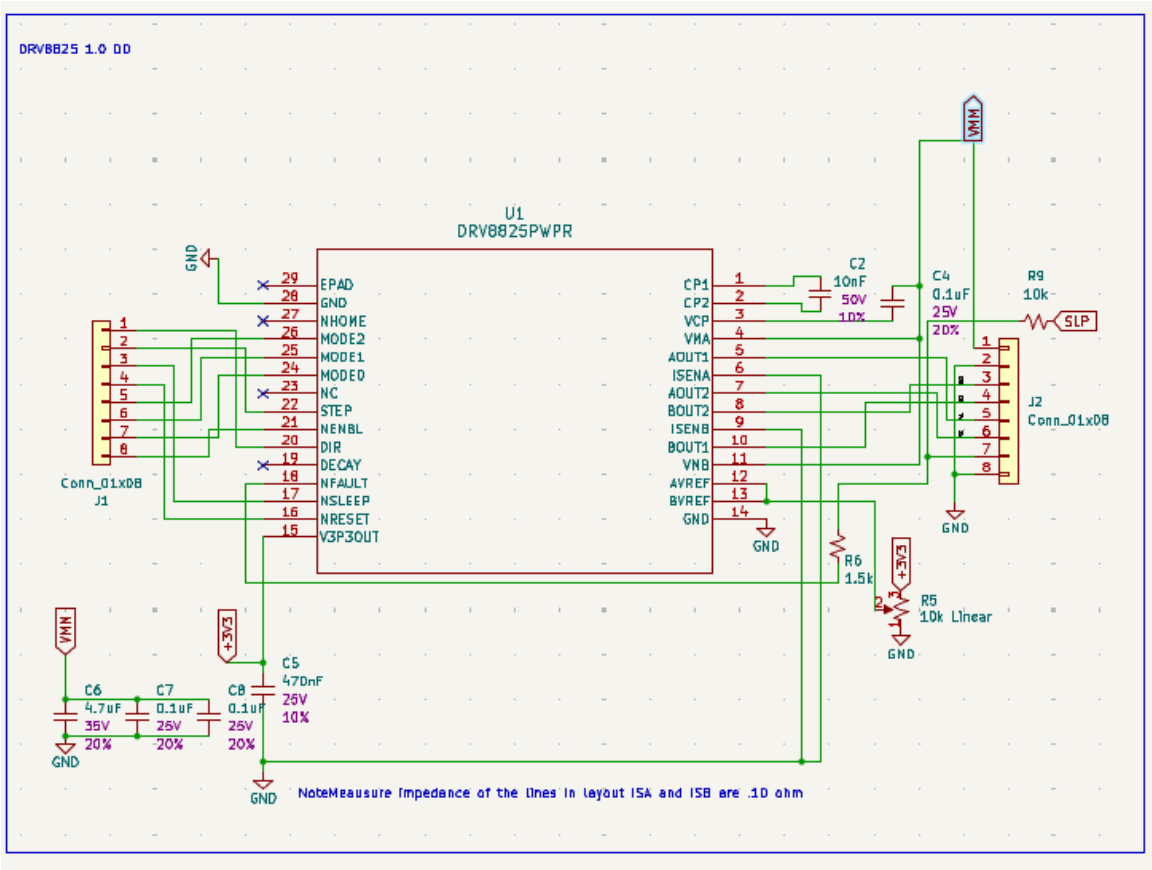

6.9 UART-USB Conversion

STM32 to Rasberry pi connection sheet

table of operations in low power modes (check significant PCB design)

6.10 Voltage Regulator Circuit

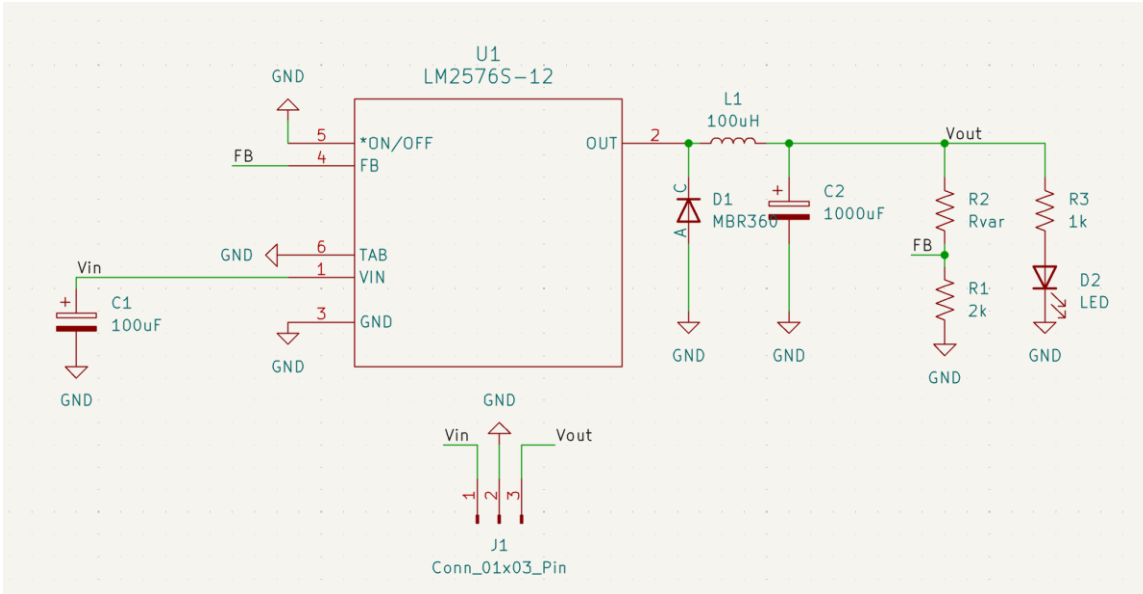

Figure 5 - Variable Voltage Regulator Circuit LM2576

The above voltage regulator circuit is a variable voltage output configuration of a LM2576. By adjusting R_{var} according to the formula $v_{out} = v_{ref}\left(1 + \frac{R_2}{R_1}\right)$ where the value of R_2 can be calculated by the equation $R_2 = R_1\left(\frac{V_{out}}{V_{ref}} - 1\right)$. V_{ref} is given in the datasheet of the regulator as 1.23 [163]. To calculate V_{out} = 3.3 where R_1 = 2k; R_2 = 3.366k. For V_{out} = 5 where R_1 = 2k; R_2 = 6.13k. To calculate V_{out} = 12 where R_1 = 2k; R_2 = 17.51k. In the event these resistor values are not able to be sourced the desired output can still be calculated by that formula as long as R_1 = [1k,5k].

6.x (final point) PSU

PSU specifications:

The power for this project is coming from a standard wall outlet. The device that is going to be taking that power and stepping into 24V dc is the LRS-350-24. The output of this device is going to split into 2 regulators that will then power the entirety of the mainboard's set of components. This includes a 3.3V and a 5V regulator. The only things that the regulators are not going to power directly are the stepper motors. The circuits are provided below.

The regulation circuits were designed with the use of TI Webench [164].

Chapter 7 – Software Design

7.1 Software Structure Overview

The software consists of three separate programs: the slicer, the firmware, and the vision program. The slicer runs on the user's computer, taking the user-given Gerber file and generating a G-code for the firmware to interpret. The firmware runs on the microcontroller located on the custom-made mainboard, interpreting the G-code into movements for the stepper motors. The vision software runs on the single-board computer, capturing a high-resolution image of the PCB after each layer is produced to ensure there are no opens or shorts in the wiring.

These three softwares will be organized into separate repositories on GitHub for simplicity of tracking changes to each one. Changes to each software are independent of the other generally, so it would only cause trouble for them to be in the same single repository. However, a portion of the vision software needs to be merged with the slicer to demonstrate any possible defects in the produced PCB.

7.1.1 Use Case Diagram

Below is a high-level view of the use cases of the printer.

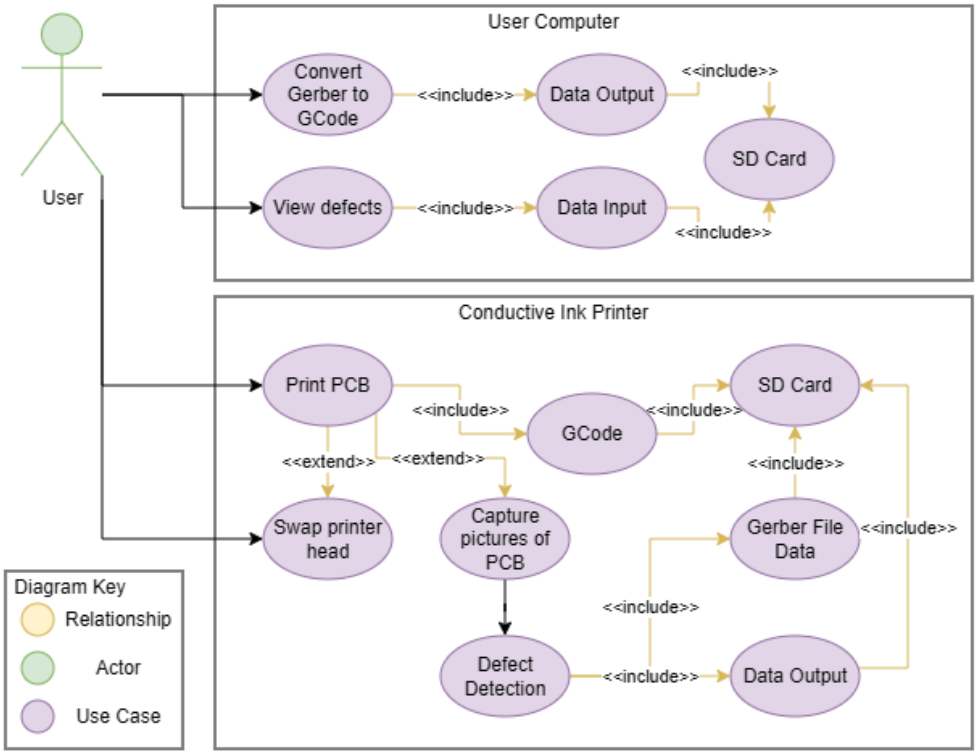

Figure 6 - Conductive Ink Printer Use Case Diagram

7.1 Slicer Software

7.1.1 Slicer File Structure

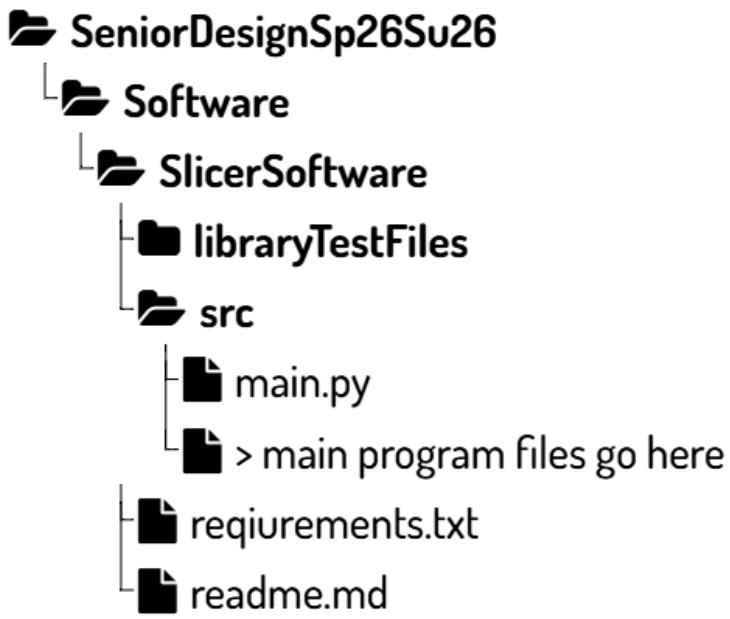

Figure 7 - Slicer Software Folder Structure

The slicer software is broken into a simple folder structure. The entire slicer software can be contained within the slicer software folder broken further into folders. The libraryTestFiles folder contains simple test scripts for all external libraries that the slicer uses. The src folder contains all the source code of the program. This contains the programs such as GUI which controls the function of the user interface and generates the config file that the rest of the slicer software will further read based on the parameters input and the Gerber zip file location. The requirements.txt file contains the list of external libraries that are used for the slicer to function and can be installed using **pip install -r requirements.txt**. The readme.md file contains instructions about the software, running it and information about each folder in the event that another person may use the slicer.

7.1.2 GUI Input

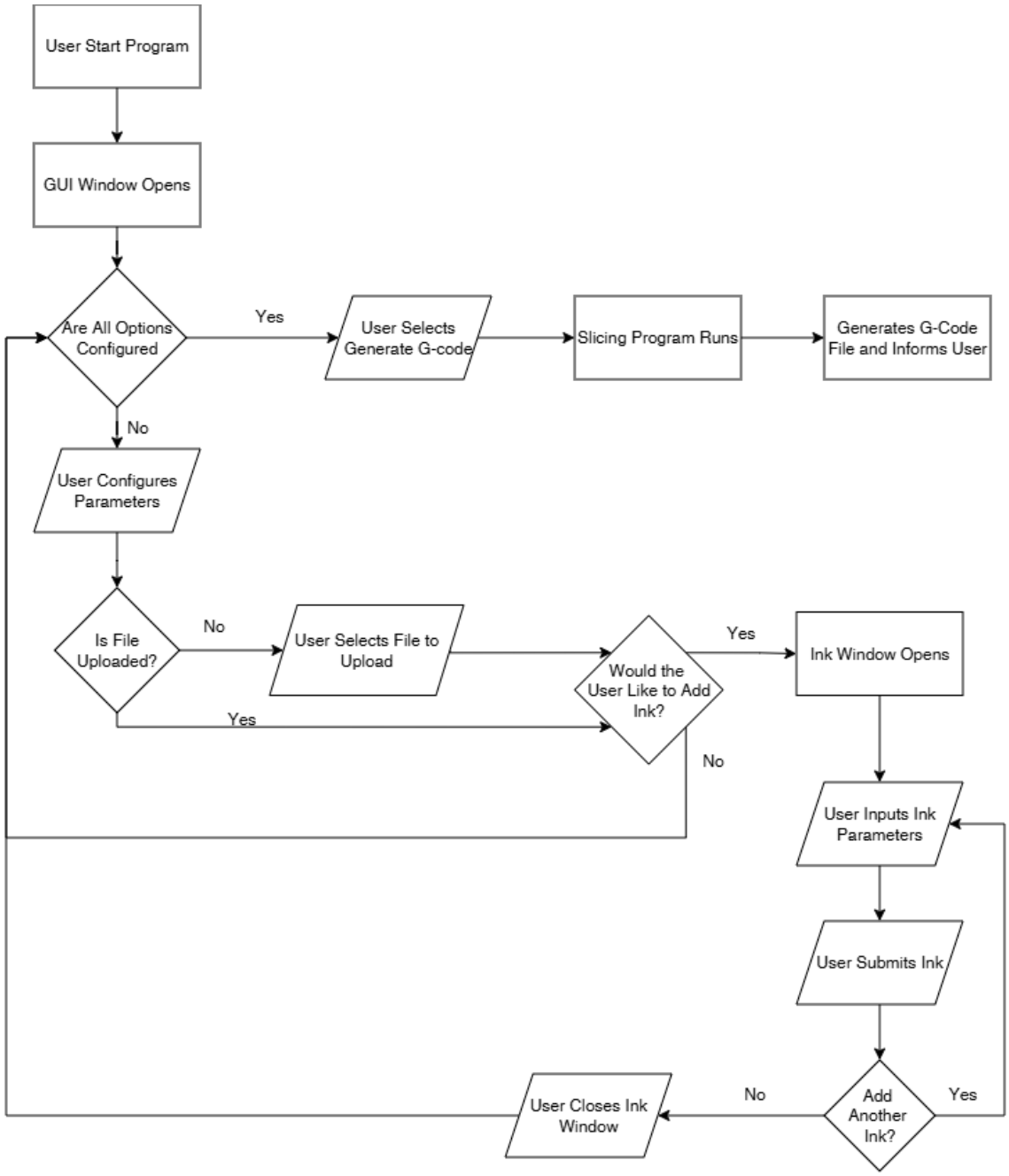

Figure 8 - GUI Flowchart

As seen in the above program the GUI software is primarily concerned with user interaction. The user interface takes input from the user to inform the slicer how the G-code should generate. The parameters that the user inputs such as bed size and the extrusion speed, and ink parameters. Additionally, the user will select a zip file with the Gerber files the user wants to upload. Once all configurations on the main menu have been selected the user can choose to add a number of inks. The inks will take in parameters such as the name, nozzle

diameter, curing temp, and curing time. Once the ink parameters have been configured the user can select to add the ink. Once the ink has been added they will have the option to add another ink such as an insulator ink. When attempting to achieve stretch goals options such as solder paste rather than ink, or milling parameters such as bit size will be able to be selected instead. Once all the information has been put into the GUI the user can select to save to update any information. A configuration file will then be generated which will be used by the slicer functionality. Once the user is ready, they can then select to generate the G-code. This will run the actual slicing software in the background before creating the finalized G-code file for the user on their local machine.

7.1.3 Parsing File and Converting to G-Code

The parsing and conversion slicer handles the bulk of file processing and behind the scenes work. The slicer software is made of these two utilities. The first step of this process is taking information from the configuration file generated by the GUI. The configuration file contains all information about the print and the file location of the desired Gerber Zip File. The parser library will locate the file and this is where the generation begins. The first layer will be set to a conductive ink layer. This layer will take in one of the copper layers from the unzipped files. The parser will then read through each aperture in that layer file. As the parser reads though the file it will set the coordinates into temporary variables. These variables will be used to convert those locations to movements on the G-code generation library. As the parser considers the coordinates that need to make up the area of a copper part it will divide that by the diameter of the nozzle. In the event that the extruded region is not a perfect multiple of the nozzle diameter calculations will be made to over extrude in order to increase trace thickness. The parser will continue reading this layer in the same manner and continue though until the end of the layer file. Once the layer file is completed G-code will be inserted to bring the bed to the temperature needed for the time needed defined by the ink parameters. After the ink has cured the printer will insert another G-code layer to move over the trace with the camera following this time rather than the extruder nozzle.

If more than one conductive layer is needed then the slicer will insert a G-Code command for a tool change to an insulator nozzle. One the tool change is completed a copy of the pervious layer with a slightly increased trace size will be created in order to ink over. Vias and pads will be ignored but regular traces will be covered with the insulator to prevent shorts. Then the same steps will repeat as with the conductive layer and from there the slicer will continue to generate until there are no more conductive layers.

Once the slicer has finished generating the G-code file needed then the file will be pushed and available for the user to send to external storage so they can load it to the printer firmware.

7.2 Firmware Software

7.3 Vision Software

The vision software can be divided into image capture, preparation, and detection.

7.3.1 Capturing and Creating a Composite Image

To capture a high-resolution image of the PCB using our microscope camera, we cannot capture the entire PCB area at once. Instead, we will pan the camera over the PCB, taking pictures of smaller neighboring areas that will be "stitched" into a larger composite image. To combine these pictures, OpenCV offers concatenation functions to concatenate images either vertically or horizontally, given that they have the same dimension on the edge that they are being combined on. With these functions, a composite image can be achieved with a simple nested for-loop. The inner loop horizontally concatenates images at the same vertical height into strips and the outer loop vertically concatenates each new strip into the full high-resolution composite image [165].

Handling Undesirable Lighting

The microscope camera has a ring of discrete LEDs that produces relatively homogeneous and bright lighting in the middle of the ring, but worse lighting on and outside the ring. On the ring, the light from the LED is reflected brightly where the LEDs are directly overhead. This bright white light may be mistaken for a trace, which is also white, when performing thresholding. Outside the ring, the light from the LEDs becomes dimmer than the rest of the picture. This dimness may cause the formation of edges in the larger composite image between images from individual captures. While these lighting issues can be avoided by simply moving in closer to the PCB such that only the homogeneous lighting in the middle is visible, this reduces the area covered by a single capture while unnecessary increasing the resolution (in terms of the number of pixels per mil). Instead, cropping and image blending can be used.

Cropping is relatively simple, simply taking away the poorly or excessively lit areas of the image. However, cropping needs to be handled carefully. The information lost from the images need to be regained by taking slightly overlapping pictures of images that include the cropped away information in better quality lighting. If a significant portion of the image is unusable and needs to be cropped, this essentially ruins the point of the cropping. The number of overlapping images that would need to be captured would be the same as a far more zoomed in image while the resolution of these cropped images is far worse than the zoomed images [166].

To further smooth out heterogeneity in lighting, image blending can be used. Essentially, image blending is making two images slightly transparent and then adding them. This can be done through OpenCV's addWeighted function. This functionality becomes powerful when two or more composite images of the same PCB are taken but at different offsets. Since lighting moves with the camera, the brightness of the lighting is a transient feature of any PCB picture. Two pictures of the same area can have different parts of the picture be brighter or dimmer depending on where the camera was when taking the picture. If we have two images of the PCB that are slightly offset from each other, then blending these images together will reduce the transient differences in brightness caused by the position

of the camera and its lights. However, the static or consistent features (including traces) will remain. While this technique is powerful, it also is time consuming as it requires more picture taking. It also can produce unusual edges between light and dark [167].

Image Capture and Compositing State Diagram

The diagram below demonstrates how the Raspberry Pi 5 captures and composites a high resolution image of the PCB. The image capture program is initiated by the MCU indicating that the print is done. Then, the MCU and Raspberry Pi perform a handshake to coordinate the movement of the printer head with the capture done by the camera. Simultaneously, the Raspberry Pi is processing the individual captures by concatenating them first by rows in the X-dimension of the PCB and then by columns in the Y-dimension of the PCB. The program finishes when the printer head reaches and captures the other corner of the PCB.

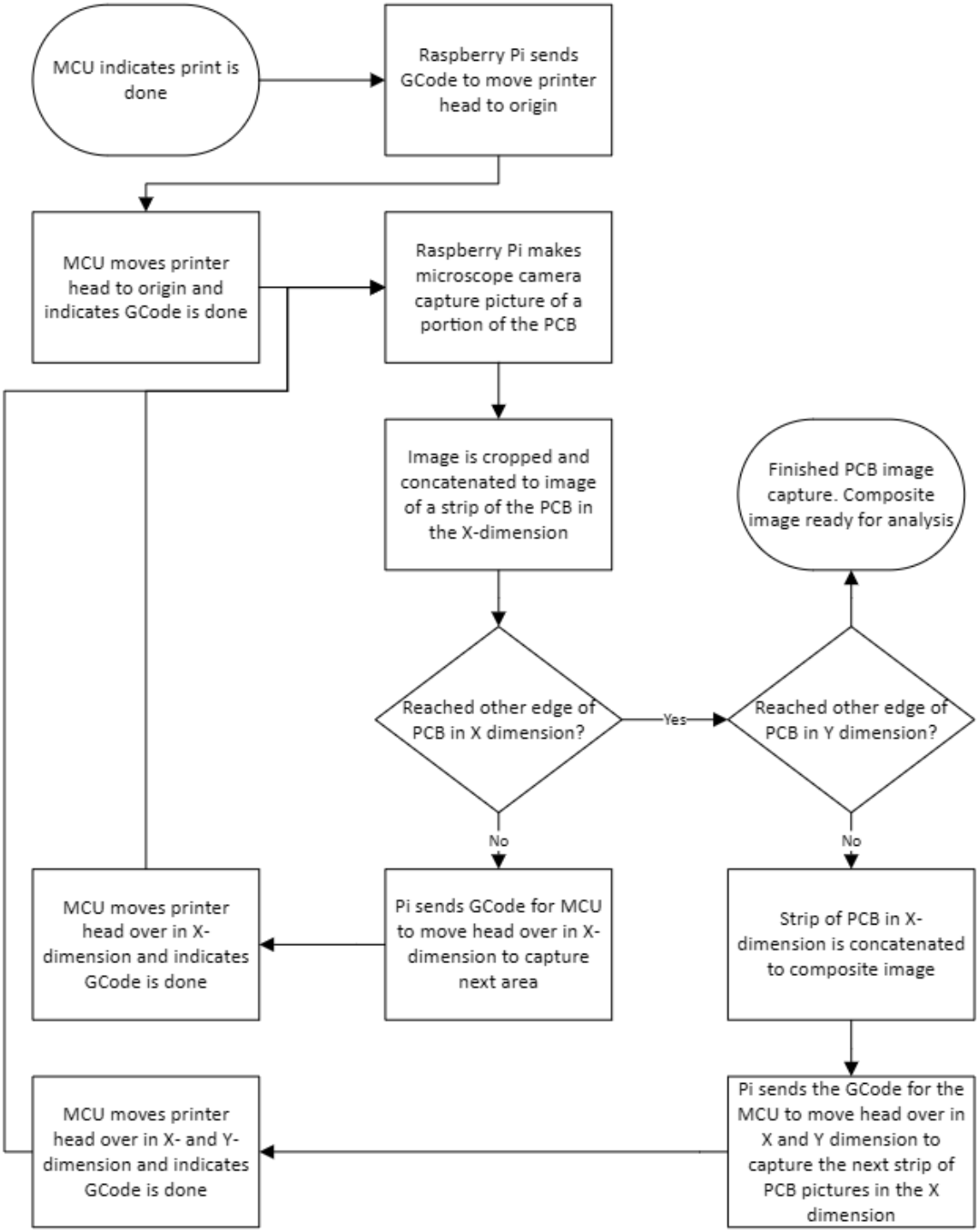

Figure 9 - Image Capture and Compositing Software Flowchart

7.3.2 Image Preparation

To further improve the quality of the image, we want to make the traces more distinguishable from the substrate that it is located on. There are several techniques to improve the ability to distinguish a trace from the substrate, including image subtraction, image sharpening, and increasing image contrast.

Image Subtraction

As aforementioned in computer vision algorithms, image subtraction is the literal subtraction of two images, producing an image showing where and how pixels differ. Image subtraction does not have to be used by itself as an algorithm for defect detection. In fact, its ability to detect changes between images can help distinguish traces from the substrate or other features from before and after the addition of ink. It may require more storage or RAM as we would need to store the image of before and after ink is added. It may also involve image registration, as the before and after images may not be completely aligned because of some differences in cropping or other effects of vision.

Sharpening

Sharpening is a convolutional filter that increases the intensity changes in an image to enhance edges and finer features. This can help further emphasize the edges of traces from the PCB. There is no need for knowledge of the picture before the ink was added [168] [64].

Contrast

Contrast is a property of an image that would seem equivalent to sharpness, but it is rather a more global property that describes the total range of brightness in an image. Increasing contrast can be achieved through histogram equalization, which essentially increases the range that a picture's intensity histogram occupies. Again, there is no need for knowledge of how the picture used to look before the ink was added. Instead, increasing contrast makes existing features appear more apparent [169].

Thresholding

The final step in distinguishing traces and preparing them for analysis for defects, we need to perform thresholding. Thresholding essentially converts the image to a black-and-white image, where the value of a pixel is used to determine whether it is converted to black or white. For thresholding based on color, the OpenCV library provides the inRange() function to isolate pixels that match a certain hue, saturation, or value. This is necessary to make the image finally have a binary idea of what is or is not a trace [170].

Image Preparation State Diagram

The following figure demonstrates the flow of image preparation. First, the composite image is cropped to get rid of any part of the 3D printer area that may have been captured. Then, the image is compressed to reduce memory usage. After those storage optimizations,

the image is prepared for analysis by performing histogram equalization, sharpening, and image subtraction if needed. Finally, thresholding is performed to convert the image to a black-and-white binary image.

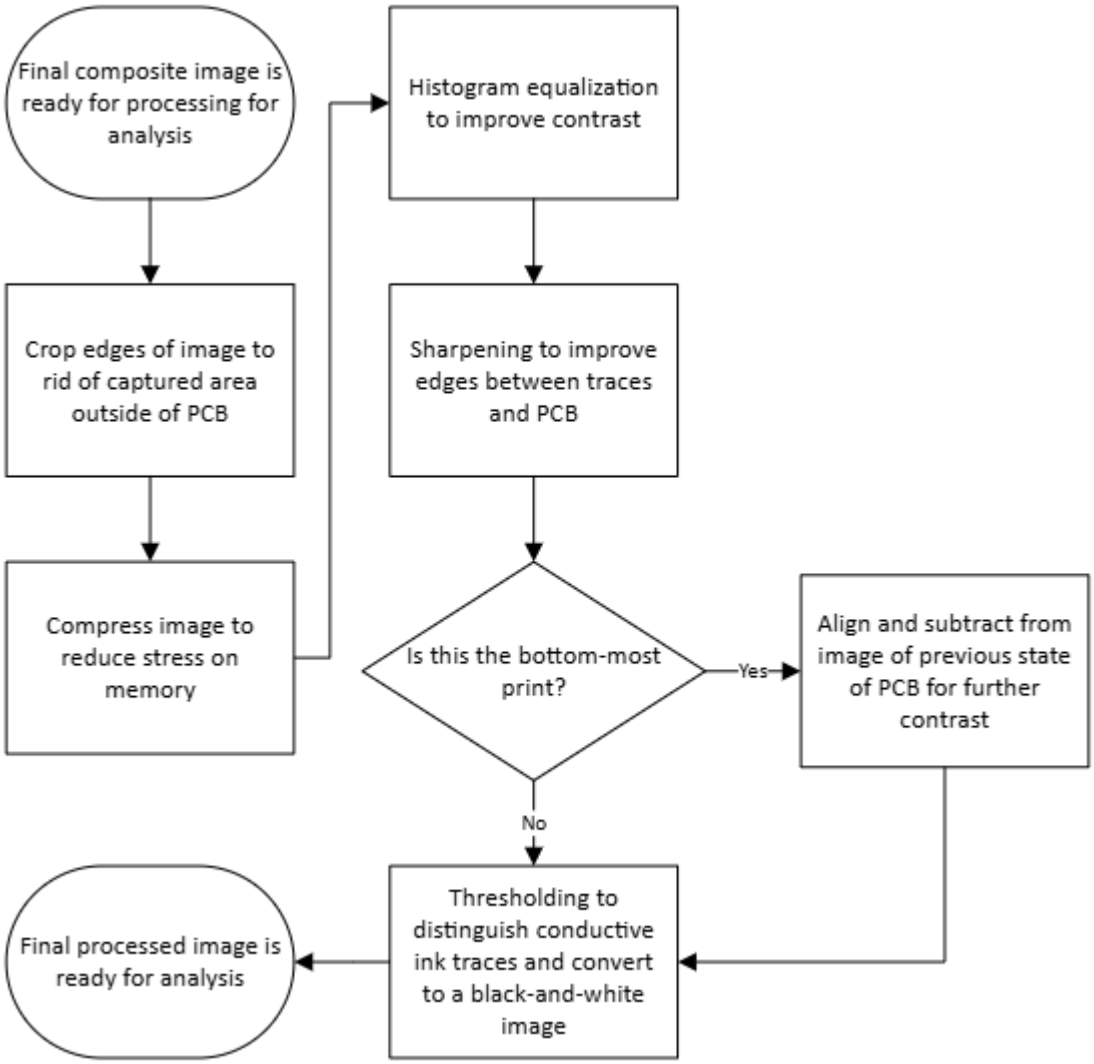

Figure 10 - Image Preparation Flowchart

7.3.3 Detection of Open and Short Circuits

Contour Detection

Contours are curves joining all continuous points along the boundary of a region that has the same color or intensity. In other words, they are polygons that bound continuous regions. OpenCV offers a function named findContours() to detect these contours. Contours can be used to detect the continuous regions of connectivity between pads that traces create.

Extraction of Significant/Test Points

Test points are akin to the points of contact made between a pad and a probe's tip. One can reliably test connectivity between two pads by tapping a probe to the middle of each of the pads, creating two points of contact and hopefully completing a circuit. Similarly, test points will be generated by reading the Gerber file for what pads are present, what the center of each pad is, and what other points that point is meant to connect to. To detect if there is a connection between any two pads (or in other words, see if we can "complete the circuit"), we can check if each corresponding test point is in the same contour as each other. This can be done with the function pointPolygonTest().

Defect Detection State Diagram

Once the final processed image is ready for analysis, the Raspberry Pi takes the Gerber file provided from the MCU and creates an image of the intended produced PCB. Image registration aligns the real image of the PCB to the intended one, and contour detection is performed on both the real and intended images of the PCB. Using the "cream" file layer which is used for solder paste stencils in the Gerber file, test points (points located in the middle of pads) can be extracted. These test points will be iterated through in a two-layer nested loop, with the outer loop selecting a point i and the inner loop selecting a point j. Using the intended image of the PCB, these points are tested as to whether they belong in the same contour. If they do, then they should be connected electrically. Otherwise, they should not be connected. Then, these points are tested as to whether they are in the same contour. If they are connected, then it is a short if they are not meant to be connected. If they are not connected, then is an open if they are meant to be connected. Otherwise, there is no error.

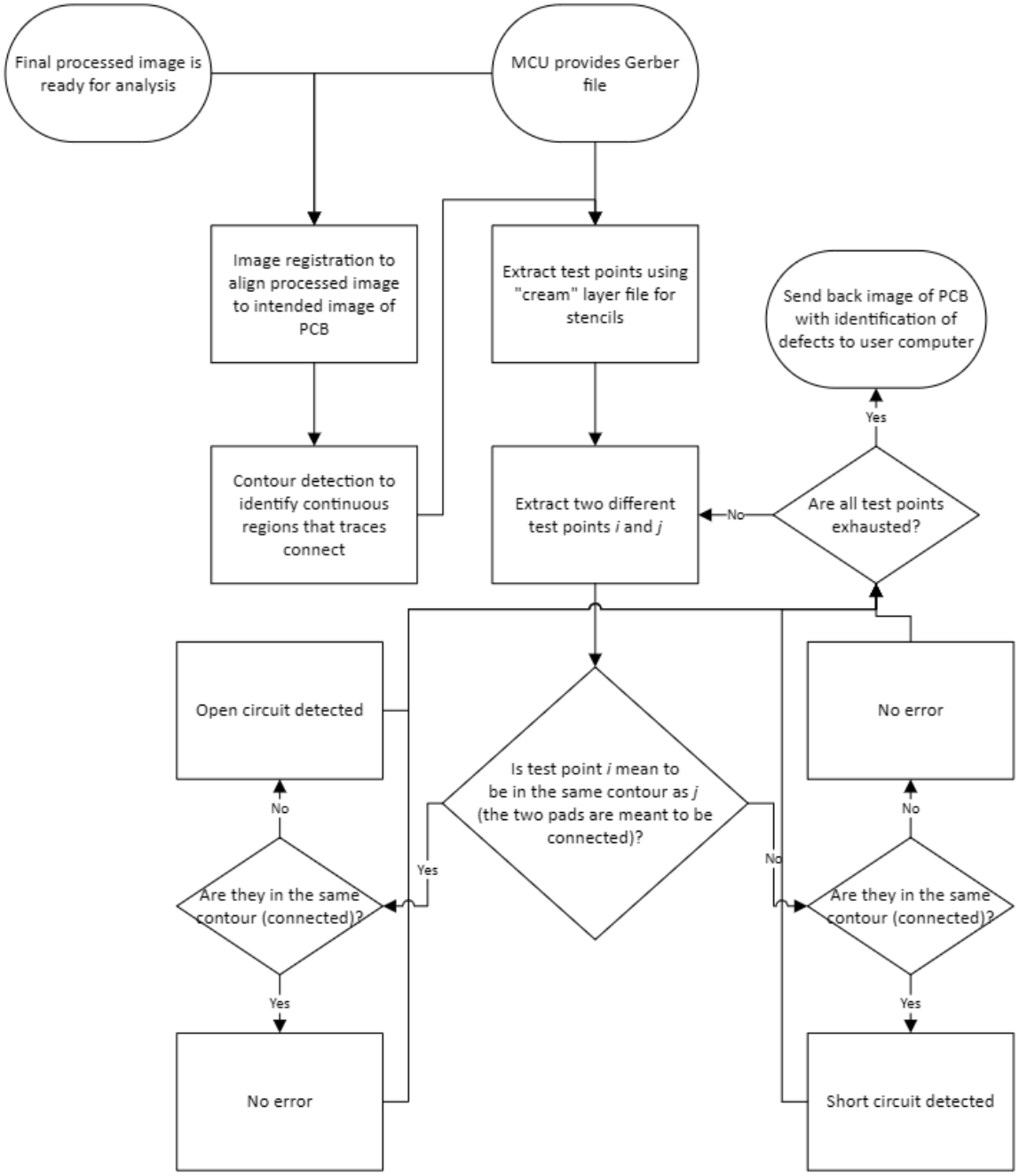

Figure 11 - Defect Detection Flowchart

Chapter 8 – PCB Layout

8.1 Mainboard Layout

8.2 Voltage Regulator Layout

8.3 Motor Driver Layout

Chapter 9 – System Testing and Evaluation

Chapter 10 – Administrative Content

10.1 Budget and Financing

This project is being sponsored by Dr. Arthur Weeks from the Department of Electrical and Computer Engineering at UCF. The budget table is provided below:

Table 49 - Estimated Budget

Subsystem/Category	Estimated Cost
Printer Hardware*	$280
Dispensing System	$305
Control System	$90
Swappable Head System	$70
Vision System	$70
Mechanical Components	$80
PCB Manufacturing	$140
Shipping & Handling	$50
Contingency (20%)	$215
Total	$1300

*The 3D printer was donated to the project and excluded from the total cost

Table 50 - Bill Of Materials

Part	Items Per U	Units Neede	Unit Price	Total Price	Price per Iter
150 µm Nozzles	4	1	$ 59.99	$ 59.99	$ 15.00
3.2 Inches TFT LCD Touch	1	1	$ 16.99	$ 16.99	$ 16.99
Conductor 3 Ink	1	1	$ 99.99	$ 99.99	$ 99.99
DRV8825	5	1	$ 14.49	$ 14.49	$ 2.90
Microscope	1	1	$ 26.59	$ 26.59	$ 26.59
Nema 17 - Through Shaft	1	1	$ 26.09	$ 26.09	$ 26.09
Nema 17 Stepper Motor	1	3	$ 21.14	$ 63.42	$ 21.14
Raspberry Pi 5	1	1	$ 178.99	$ 178.99	$178.99
SI3014 Stretchable	1	1	$ 99.99	$ 99.99	$ 99.99

*This table considers items that need to be purchased by the group and not items that were donated or came with the Ender 3

10.2 Milestones and Distributions

Table 51 - Project Milestones

Milestone Number	Milestone Description	Start Date	Estimated End Date	Advisors and requirements
1	Select Reviewers and sponsors	1/13/26	1/26/25	Get email agreement from all reviewers and secure sponsorship
2	Finish D&C Report	1/13/26	1/25/26	All team members finish writing respective sections of D&C report and we have 1 week to review
3	D&C Review Meeting	1/26/26	1/29/26	Review D&C report with Dr. Chan and finish any edits before due date on 1/30/26

4	D&C Group Meeting	2/2/26	2/4/26	Meet with group advisor for approval of D&C and overall project
5	Upload D&C to website	2/4/26	2/6/26	Upload D&C to website and ensure all reviewers have access
6	Start Midterm Report	2/9/26	3/26/26	Work on midterm report and finish a week early to give more time to meet with advisors/reviewers
7	Start working on demo	2/9/26	4/14/26	Work on demo while finishing paper
8	Work on PCB Design	3/10/26	4/28/26	Work on PCB design for motherboard and order over break
9	Midterm Report Meeting	3/30/26	4/1/26	Meet with advisor to discuss midterm report
10	Finish Final Report	4/6/26	4/21/26	Finish writing final report once midterm report is finished
11	Record Demo Video	4/14/26	4/21/26	Record demo video

Table 52 - Work Distribution

Task	Primary	Secondary
Motherboard PCB Design	Gianni	Ethan
System Power	Gianni	Ethan
Standard Head PCB Design	Jeremy	Andrew
Slicer Modification	Ethan	Andrew
Camera Vision	Andrew	Ethan
Head Embedded Programing	Jeremy	Andrew
Device Communication Handshakes	Gianni	Jeremy

Printer Firmware	Ethan	Jeremy
Head Housing CAD Design	Jeremy	Gianni

Appendices

Appendix A – Works Cited

[1] Voltera, "Conductor 3 ink datasheet," Voltera, [Online]. Available: https://files.gitbook.com/v0/b/gitbook-x-prod.appspot.com/o/spaces%2FKMS1I2mCuOJeZyXjzOqV%2Fuploads%2F3lSQDtipbeT5ch4LjUSU%2FConductor%203%20Technical%20Data%20Sheet.pdf?alt=media&token=82077e7b-cb96-4080-a26a-660e25ecb76a. [Accessed 23 03 2022].

[2] ACI , "SS1109 Strechable Printed Silver Conductor," [Online]. Available: https://files.gitbook.com/v0/b/gitbook-x-prod.appspot.com/o/spaces%2FYKzrL5Rz2l0ufpEa39Yc%2Fuploads%2FXXP80m8GGcjH0Jhppq2i%2FACI-Data-Sheet-SS1109-Rev-4.pdf?alt=media&token=78af1ebb-c4ec-42ff-9bb0-edd0072e543a. [Accessed 26 March 2026].

[3] Chipquik, "Conductive Paint 5g/5cc Syringe - Low Resistance," 2020. [Online]. Available: https://www.chipquik.com/datasheets/CP1-5S.pdf. [Accessed 26 March 2026].

[4] ACI Materials, "SI3014 Strechable Printed Insulator," [Online]. Available: https://files.gitbook.com/v0/b/gitbook-x-prod.appspot.com/o/spaces%2FYKzrL5Rz2l0ufpEa39Yc%2Fuploads%2Fz1uvxUoJBaPkV9RaIW7J%2FACI-Data-Sheet-SI3104-Rev-3.pdf?alt=media&token=ee40745b-583c-43fd-ba36-046b6aecf4cf. [Accessed 27 March 2026].

[5] Voltera, "A Compatibility Guide for Inks and Substrates," Voltera, 15 March 2026. [Online]. Available: https://www.voltera.io/blog/compatibility-guide-inks-substrates?id=63cabdf9fe0e561adb9d2fbe. [Accessed 27 March 2026].

[6] Creative Materials, "127-48D Dielectic Ink & Coating," 14 December 2017. [Online]. Available: https://server.creativematerials.com/datasheets/DS_127_48D.pdf. [Accessed 27 March 2026].

[7] Creative Materials, "127-24PB EXTREMELY FLEXIBLE SCREEN-PRINTABLE SOLVENT RESISTANT UV-CURABLE COATING," 11 August 2020. [Online]. Available: https://server.creativematerials.com/datasheets/DS_127_24PB.pdf. [Accessed 27 Match 2026].

[8] STMmicroelectronics, "STM32WB55xx datasheet," STMmicroelectronics, [Online]. Available: https://www.st.com/resource/en/datasheet/stm32wb55cc.pdf. [Accessed 22 03 2026].

[9] ESPressif, "ESP32-s3-WROOM-2 datasheet," ESPressif, [Online]. Available: https://documentation.espressif.com/esp32-s3-wroom-2_datasheet_en.pdf. [Accessed 22 03 2026].

[10] Texas Instruments, "MSP430FR698x MCU's datasheet," Texas Intruments, [Online]. Available: https://www.ti.com/lit/ds/symlink/msp430fr6989.pdf?HQS=dis-dk-null-digikeymode-dsf-pf-null-wwe&ts=1771512484221&ref_url=https%253A%252F%252Fwww.ti.com%252Fgeneral%252Fdocs%252Fsuppproductinfo.tsp%253FdistId%253D10%2526gotoUrl%253Dhttps%253A%252F%252Fwww.t. [Accessed 22 03 2026].

[11] STM32, "STM32H723 datasheet," STM32, [Online]. Available: https://www.st.com/resource/en/datasheet/stm32h723zg.pdf. [Accessed 02 04 2026].

[12] StepperOnline, "What are the differences between External, Non-captive, and Captive linear stepper motors," 2026. [Online]. Available: https://www.omc-stepperonline.com/support/what-are-the-differences-between-external-non-captive-and-captive-linear-stepper-motors#:~:text=Stepper%20motors%20are%20a%20common,%2C%20non%2Dcaptive%20and%20captive.. [Accessed 02 04 2026].

[13] S. Shinde and N. Shewale, "An Overview of Stepper Motor Drivers and Their Types," Portescap, 1 June 2023. [Online]. Available: https://www.portescap.com/en/newsroom/blog/2023/06/an-overview-of-stepper-motor-drivers-and-their-types. [Accessed 1 April 2026].

[14] Marlin, "Trinamic motors," Marlin, [Online]. Available: https://marlinfw.org/docs/hardware/tmc_drivers.html. [Accessed 22 03 2026].

[11] I. E. Moyer, "Core XY," [Online]. Available: https://corexy.com/theory.html. [Accessed 24 03 2026].

[15] Creality, "Ender-3," Creality, [Online]. Available: https://www.creality.com/products/ender-3-3d-printer. [Accessed 1 April 2026].

[16] Topcellent, "Ceramic Heater How Does It Work: Everything You Should Know," Topcellent, 4 August 2025. [Online]. Available: https://topcellent.com/ceramic-heater-how-does-it-work/. [Accessed 1 April 2026].

[17] N. Agius, "How do Ceramic Heaters Work?," doityouself, 10 April 2010. [Online]. Available: https://www.doityourself.com/stry/how-do-ceramic-heaters-work. [Accessed 1 April 2026].

[18] "The Complete Guide to Cartridge Heaters," Thermal Corporation, [Online]. Available: https://thermalcorporation.com/the-complete-guide-to-cartridge-heaters/. [Accessed 1 April 2026].

[19] Keenovo, "Keenovo Silicone Heater," [Online]. Available: https://keenovo.store/products/keenovo-silicone-heater-235mm-x-235mm-for-ender-3-3d-printer-build-plate-heatbed-heating-upgrade?variant=33420243206284. [Accessed 1 April 2026].

[20] Alpha 3D Lab, "K2 Plus Heated Bed Kit," Alpha 3D Lab, [Online]. Available: https://alpha3dlab.com/products/heated-bed-kit?variant=50618039337240&country=US&currency=USD&utm_source=chatgpt.com. [Accessed 1 April 2026].

[21] DHJPSTUYW, "120V/220V 800W Hot Bed Silicone Heating Pad 3D Printer Accessories Heated Print Bed for PLUS Heating Mat Accessories," Walmart, [Online]. Available: https://www.walmart.com/ip/120V-220V-800W-Heated-Print-Bed-Replacement-Part-Hot-Bed-Silicone-Heating-Pad-for-PLUS-3D-Printer-Accessories/17966455497?wmlspartner=wlpa&selectedSellerId=102893495&utm_source=chatgpt.com. [Accessed 1 April 2026].

[22] Voltera, "User Manual," 2025. [Online]. Available: https://docs.voltera.io/docs/v-one/downloads/user-manuals. [Accessed 02 04 2026].

[24] Voltera, "225 µm Nozzles," 2026. [Online]. Available: https://store.voltera.io/collections/consumables/products/nozzles. [Accessed 2026 03 2026].

[25] ISM, "What is an ISO 80369-7 Compliant Luer? - The New Luer Standard," 15 6 2021. [Online]. Available: https://www.industrialspec.com/about-us/blog/detail/what-are-iso-80369-7-compliant-luers?srsltid=AfmBOooBtuwAMqvle2IX0kG8mZnR-SNnpAg0v4lUKohNYQ6eafK9hyMM. [Accessed 2 4 2026].

[26] Voltera, "150 µm Nozzles – 4/Pack," [Online]. Available: https://store.voltera.io/collections/consumables/products/nozzles-150-micron?_pos=2&_fid=4fcd5ed5e&_ss=c. [Accessed 2 4 2026].

[27] Voltera, "230 µm Disposable Nozzles," [Online]. Available: https://store.voltera.io/collections/consumables/products/nozzles-disposable?_pos=3&_fid=4fcd5ed5e&_ss=c. [Accessed 2 4 2026].

[28] N. EFD, "25 Gauge (250 µm ID) Dispensing Tips," [Online]. Available: https://store.voltera.io/products/nordson-efd-7018333-dispensing-tip-25-gauge-red-1-4-50-box?srsltid=AfmBOoqMW1p0VIYP4o4sYJeHT8KWDTP2rB_w9IT55qWp9X_RBFzZgOu4. [Accessed 2 4 2026].

[29] Britannica Editors, "Magnification," [Online]. Available: https://www.britannica.com/technology/magnification. [Accessed 2 April 2026].

[30] The American Society of Cinematographers, "Understanding Lens Distortion," [Online]. Available: https://theasc.com/articles/understanding-lens-distortion. [Accessed 2 April 2026].

[31] Scientific Volume Imaging, "Vignetting correction," [Online]. Available: https://svi.nl/Vignetting. [Accessed 2 April 2026].

[32] G. Hollows and N. James, "Understanding Focal Length and Field of View," [Online]. Available: https://www.edmundoptics.com/knowledge-center/application-notes/imaging/understanding-focal-length-and-field-of-

view/?srsltid=AfmBOookbNzMHrc7wcka-FqdW8kP1NqDcc6rDRFeiDvjTQAq1lJkH-ev. [Accessed 2 April 2026].

[33] Canon Europe, "Image sensors explained," [Online]. Available: https://www.canon-europe.com/pro/infobank/image-sensors-explained/. [Accessed 2 April 2026].

[34] Nikon, "MicroscopyU," [Online]. Available: https://www.microscopyu.com/microscopy-basics/working-distance-and-parfocal-length. [Accessed 2 April 2026].

[35] Arducam, "Arducam 1/1.32" 64MP Auto Focus Camera Module for Raspberry Pi," [Online]. Available: https://www.arducam.com/arducam-1-1-32-64mp-autofocus-camera-module-for-raspebrry-pi.html. [Accessed 2 April 2026].

[36] M. Malwitz, "An Intro to Macro Photography," 17 December 2025. [Online]. Available: https://www.bhphotovideo.com/explora/photography/buying-guide/macro-lens-buying-guide. [Accessed 2 April 2026].

[37] Apple, "Take macro photos and videos with your iPhone camera," [Online]. Available: https://support.apple.com/guide/iphone/take-macro-photos-and-videos-iphfaacf2eb0/ios. [Accessed 2 April 2026].

[38] Digikey, "SC1223," [Online]. Available: https://www.digikey.com/en/products/detail/raspberry-pi/SC1223/17278639. [Accessed 2 April 2026].

[39] Logitech, "Logitech Brio 100 Full HD 1080p Webcam for Meetings, Streaming, Desktop, Laptop, · Logitech Brio 100/101 - White and Black," Amazon, [Online]. Available: https://www.amazon.com/Logitech-Meetings-Streaming-Auto-Light-Microsoft/dp/B0BXGCRRLW. [Accessed 2 April 2026].

[40] Xenvo, "Pro Lens Kit for iPhone and Android, Macro and Wide Angle Lens with LED Light and Travel Case Black," [Online]. Available: https://a.co/d/090rb3KD. [Accessed 2 April 2026].

[41] Keywing, "KEYWING Phone Camera Lens 3 in 1 Phone Lens Kit, 198 Fisheye Lens + 120 Super Wide-Angle Lens + 20x Macro Lens for iPhone Samsung Android

[1] Smartphone Black 3in1," [Online]. Available: https://a.co/d/02U4rv7t. [Accessed 2 April 2026].

[42] Britannica Editors, "Photomicrography," [Online]. Available: https://www.britannica.com/technology/photomicrography. [Accessed 2 April 2026].

[43] Bysameyee, "4K 3840x2160P Wireless Digital Microscope, Handheld HD USB Inspection Camera Endoscope 50x-1000x Magnification, Compatible with iPhone iPad Android Phone Tablet Windows Mac (with Stand)," Amazon, [Online]. Available: https://a.co/d/04LSkpXd. [Accessed 11 February 2026].

[44] Bysameyee, "USB Digital Microscope 40X to 1000X, 8 LED Magnification Endoscope Camera with Carrying Case & Metal Stand, Compatible for Android Windows 7 8 10 11 Linux Mac (Not for iPhone/iPad)," Amazon, [Online]. Available: https://a.co/d/0hCNsUJy. [Accessed 11 February 2026].

[45] Cainda, "USB Microscope Camera with Stand & Carrying Case, Cainda Digital Microscope Compatible with Android Windows Linux Mac, Portable Magnifier Camera for Kids Students Adults(Not for iPhone/iPad)," Amazon, [Online]. Available: https://a.co/d/07Si7l0p. [Accessed 11 February 2026].

[46] Jiusion, "Jiusion 2K HD 2560x1440P USB Digital Microscope for Android Cellphone and Tablet Windows Mac Linux, 40X to 1000X Magnification Endoscope Handheld Mini Magnifier Camera for Coin Facial Skin Scalp," Amazon, [Online]. Available: https://a.co/d/0byx3c4l. [Accessed 11 February 2026].

[47] Jiusion, "Jiusion WiFi USB Digital Handheld Microscope, 50 to 1000x Wireless Magnification Endoscope 4K 3840x2160P Camera 8 LEDs with Metal Stand for iPhone iPad Android Mac Windows Linux Chrome," Amazon, [Online]. Available: https://a.co/d/0jlOqUDb. [Accessed 11 February 2026].

[48] Keemika, "USB Digital Microscope, 50x-1600x Magnification Handheld, 1920P HD 8 LED Lights, Portable Pocket Microscope, Compatible with iOS and Android Devices, +2MP Magnifier Camera, No PC Support," Amazon, [Online]. Available: https://a.co/d/07eouBEa. [Accessed 11 February 2026].

[49] Plugable, "Plugable USB Digital Microscope 250x, 2MP Micro Camera with Flexible Arm Stand - Handheld USB & USB-C Microscope, Windows, Mac, ChromeOS, Linux, Android, iPad Compatible," Amazon, [Online]. Available: https://a.co/d/0eW0kteb. [Accessed 11 February 2026].

[50] Skybasic, "Wireless Digital Microscope, Skybasic 50X-1000X Magnification WiFi Portable Handheld Microscopes with Adjustable Stand HD USB Microscope Camera

[50] Compatible with iPhone Android iPad Windows Mac Computer," Amazon, [Online]. Available: https://a.co/d/0gJsp0j4. [Accessed 11 February 2026].

[51] Nikon, "Geometrical Distortion," [Online]. Available: https://www.microscopyu.com/tutorials/distortion. [Accessed 2 April 2026].

[52] Jiusion, "Jiusion 40 to 1000x Magnification Endoscope, 8 LED USB 2.0 Digital Microscope, Mini Camera with OTG Adapter Metal Stand, Compatible with Mac Windows 7 8 10 11 Android Linux Chrome Not for iPhone/iPad," Amazon, [Online]. Available: https://a.co/d/0c0vf1ug. [Accessed 11 February 2026].

[53] Raspberry Pi, "Raspberry Pi 5," Raspberry Pi, [Online]. Available: https://www.raspberrypi.com/products/raspberry-pi-5/. [Accessed 25 March 2026].

[54] Raspberry Pi, "Raspberry Pi 3 Model B+," Raspberry Pi, [Online]. Available: https://www.raspberrypi.com/products/raspberry-pi-3-model-b/. [Accessed 25 March 2026].

[55] Raspberry Pi, "Raspberry Pi 4," Raspberry Pi, [Online]. Available: https://www.raspberrypi.com/products/raspberry-pi-4-model-b/. [Accessed 25 March 2026].

[56] Orange Pi, "Orange Pi 4 Pro," Orange Pi, [Online]. Available: http://www.orangepi.org/html/hardWare/computerAndMicrocontrollers/details/Orange-Pi-4-Pro.html. [Accessed 25 March 2026].

[57] Orange Pi, "Orange Pi 5 Ultra," Orange Pi, [Online]. Available: http://www.orangepi.org/html/hardWare/computerAndMicrocontrollers/details/Orange-Pi-5-Ultra.html. [Accessed 25 March 2026].

[58] Orange Pi, "Orange Pi 6 Plus," Orange Pi, [Online]. Available: http://www.orangepi.org/html/hardWare/computerAndMicrocontrollers/details/Orange-Pi-6-Plus.html. [Accessed 25 March 2026].

[59] BeagleBone, "BeagleBone Black," BeagleBone, [Online]. Available: https://www.beagleboard.org/boards/beaglebone-black. [Accessed 25 March 2026].

[59] BeagleBoard, "BeagleY-AI," BeagleBoard, [Online]. Available: https://www.beagleboard.org/boards/beagley-ai. [Accessed 25 March 2026].

[60] BeagleBoard, "BeaglePlay," BeagleBoard, [Online]. Available: https://www.beagleboard.org/boards/beagleplay. [Accessed 25 March 2026].

[61] Sunfounder, "Orange Pi vs Raspberry Pi: A Comprehensive Comparison of Features, Performance, and Use Cases," Sunfounder, 31 December 2024. [Online]. Available: https://www.sunfounder.com/blogs/news/orange-pi-vs-raspberry-pi-a-comprehensive-comparison-of-features-performance-and-use-cases. [Accessed 26 March 2026].

[62] Digikey, "SC0073 Raspberry Pi," Digikey, [Online]. Available: https://www.digikey.com/en/products/detail/raspberry-pi/RASPBERRY-PI-3-MODEL-B/8571724?src=raspberrypi. [Accessed 26 March 2026].

[63] Analog devices, "AN-1443: Interfacing an SD Card Through the ADuCM3027/ADuCM3029 SPI Bus," Analog devices, [Online]. Available: https://www.analog.com/en/resources/app-notes/an-1443.html. [Accessed 22 03 2026].

[64] Marlin, "What is Marlin?," 2026. [Online]. Available: https://marlinfw.org/docs/basics/introduction.html. [Accessed 2 4 2026].

[65] Repetier, "Repetier-Firmware Documentation," [Online]. Available: https://www.repetier.com/documentation/repetier-firmware/repetier-firmware-introduction/. [Accessed 2 4 2026].

[66] espressif, "github/esp-idf," espressif, [Online]. Available: https://github.com/espressif/esp-idf/tree/master/examples/storage/sd_card/sdmmc. [Accessed 22 03 2026].

[67] Creality, "Creality 350W Power Supply," [Online]. Available: https://store.creality.com/products/creality-350w-power-supply. [Accessed 2 4 2026].

[68] Digikey, "Digikey LRS-250-24," Digikey, [Online]. Available: https://www.digikey.com/en/products/detail/mean-well-usa-inc/LRS-350-24/7705034. [Accessed 25 03 2026].

[70] Digikey, "PMT-24V350W1AK," [Online]. Available: https://www.digikey.com/en/products/detail/delta-electronics/PMT-24V350W1AK/4386548. [Accessed 2 4 2026].

[71] DigiKey, "WMA350H-24," [Online]. Available: https://www.digikey.com/en/products/detail/cosel-usa-inc/WMA350H-24/22523363. [Accessed 2 4 2026].

[72] Texas instruments, "TPS6293 Voltage regulator," Texas Instruments, [Online]. Available: https://www.ti.com/lit/ds/symlink/tps62932.pdf?ts=1775132641439&ref_url=https%253A%252F%252Fwww.ti.com%252Fproduct%252FTPS62932. [Accessed 02 04 2026].

[73] N. Corna, "pcb2gcode," Github, [Online]. Available: https://github.com/pcb2gcode/pcb2gcode. [Accessed 15 March 2026].

[74] Free Software Directory, "Pcb2gcode," Free Software Foundation, 28 Febuary 2014. [Online]. Available: https://directory.fsf.org/wiki/Pcb2gcode. [Accessed 15 March 2026].

[75] OfItselfSo, "Line Grinder," Github, 13 October 2024. [Online]. Available: https://github.com/OfItselfSo/LineGrinder. [Accessed 15 March 2026].

[76] M. Liyanage, D. Montez and abetusk, "gbr2ngc," Github, [Online]. Available: https://github.com/abetusk/gbr2ngc. [Accessed 15 March 2026].

[77] J. P. Willmann, "gerber_to_gcode," Github, [Online]. Available: https://github.com/Jantek/gerber_to_gcode/blob/master/README.md. [Accessed 16 March 2026].

[78] Argmaster, "pygerber," Github, 19 March 2025. [Online]. Available: https://github.com/Argmaster/pygerber. [Accessed 2 March 2026].

[79] K. Bralten, "gerber_to_svg," Github, 28 Febuary 2026. [Online]. Available: https://github.com/kbralten/gerber_to_svg. [Accessed 2 March 2026].

[80] Gregory, "CADence," Github, 22 April 2025. [Online]. Available: https://github.com/tailsghost/CADence. [Accessed 2 March 2026].

[81] J. Sala, "gscrib 1.2.0," Python Software Foundation, [Online]. Available: https://pypi.org/project/gscrib/. [Accessed 11 March 2026].

[82] F. Salvaire, "The Pythonic G-code Machine," [Online]. Available: https://fabricesalvaire.github.io/pythonic-gcode-machine/index.html. [Accessed 11 March 2026].

[83] F. Corthay, "g-code-lib," Github, [Online]. Available: https://github.com/fcorthay/g-code-lib. [Accessed 11 March 2026].

[84] Python, "tkinter — Python interface to Tcl/Tk," Python Software Foundation, [Online]. Available: https://docs.python.org/3/library/tkinter.html. [Accessed 5 March 2026].

[85] M. Fitzpatrick, "Which Python GUI library should you use?," PythonGUIs, [Online]. Available: https://www.pythonguis.com/faq/which-python-gui-library/#pyqt-or-pyside. [Accessed 5 March 2026].

[86] Qt Project, "PySide6 6.10.2," Python Software Foundation, [Online]. Available: https://pypi.org/project/PySide6/. [Accessed 11 March 20206].

[87] P. Tompson, "PyQt5 5.15.11," Python Software Foundation, [Online]. Available: https://pypi.org/project/PyQt5/. [Accessed 11 March 2026].

[88] The wxPython Team, "Overview of wxPython," wxPython, [Online]. Available: https://wxpython.org/pages/overview/. [Accessed 11 March 2026].

[89] E. v. d. Zalm, "Marlin Firmware," Marlin, 2011. [Online]. Available: https://marlinfw.org. [Accessed 14 March 2026].

[90] "v-one-marlin," Github, [Online]. Available: https://github.com/VolteraInc/v-one-marlin/tree/master. [Accessed 14 March 2026].

[91] K. O'Connor, "Klipper Overview," Klipper3D, [Online]. Available: https://www.klipper3d.org/Overview.html. [Accessed 14 March 2026].

[92] Raspberry Pi, "Benchmarking Raspberry Pi 5," Raspberry Pi, 23 October 2023. [Online]. Available: https://www.raspberrypi.com/news/benchmarking-raspberry-pi-5/. [Accessed 31 March 2026].

[93] Raspberry Pi, "Raspberry Pi 5 Documentation," Raspberry Pi, October 2023. [Online]. Available: https://www.raspberrypi.com/documentation/computers/raspberry-pi-5.html. [Accessed March 31 2026].

[94] Canonical, "Ubuntu 24.04 LTS (Noble Numbat) Release Notes," Canonical, April 2024. [Online]. Available: https://wiki.ubuntu.com/NobleNumbat/ReleaseNotes. [Accessed 31 March 2026].

[95] D. Knight, "Diet Pi OS Stats & Comparison," [Online]. Available: https://dietpi.com/stats.html#distrostats. [Accessed 31 March 2026].

[96] J. Jain, Zbotic, 11 March 2026. [Online]. Available: https://zbotic.in/raspberry-pi-ros2-ubuntu-vs-raspbian/. [Accessed 31 March 2026].

[97] OpenCV, "About," OpenCV, [Online]. Available: https://opencv.org/about/. [Accessed 27 March 2026].

[98] Intel, "What Is a Real-Time System?," Intel, [Online]. Available: https://www.intel.com/content/www/us/en/learn/what-is-a-real-time-system.html. [Accessed 27 March 2026].

[99] OpenCV, "OpenCV: Open Source Computer Vision Library GitHub," OpenCV, [Online]. Available: https://github.com/opencv/opencv. [Accessed 27 March 2026].

[100] OpenCV, "OpenCV," OpenCV, [Online]. Available: https://opencv.org/. [Accessed 27 March 2026].

[101] OpenCV, "Platforms," OpenCV, [Online]. Available: https://opencv.org/platforms/. [Accessed 27 March 2026].

[102] scikit-image Development Team, "scikit-image: Image Processing in Python GitHub," [Online]. Available: https://github.com/scikit-image/scikit-image. [Accessed 27 March 2026].

[103] scikit-image Development Team, "Installing scikit-image," scikit-image Development Team, [Online]. Available: https://scikit-image.org/docs/stable/user_guide/install.html. [Accessed 27 March 2026].

[104] S. van der Walt, J. L. Schönberger, J. Nunez-Iglesias, F. Boulogne, J. D. Warner, N. Yager, E. Gouillart and T. Yu, "scikit-image: image processing in Python," [Online]. Available: https://pmc.ncbi.nlm.nih.gov/articles/PMC4081273/. [Accessed 27 March 2026].

[105] scikit-video Developers, "scikit-video," scikit-video Developers, [Online]. Available: https://www.scikit-video.org/stable/. [Accessed 27 March 2026].

[106] The MathWorks, Inc., "Image Registration," [Online]. Available: https://www.mathworks.com/help/images/image-registration.html. [Accessed 27 March 2026].

[107] D. Bergmann, "What is image segmentation?," [Online]. Available: https://www.ibm.com/think/topics/image-segmentation. [Accessed 27 March 2026].

[108] "SimpleITK," [Online]. Available: https://simpleitk.org/. [Accessed 27 March 2026].

[109] "Getting Started," [Online]. Available: https://simpleitk.readthedocs.io/en/master/gettingStarted.html. [Accessed 27 March 2026].

[110] The MathWorks, Inc., [Online]. Available: https://www.mathworks.com/products/image-processing.html. [Accessed 27 March 2026].

[10] The MathWorks, Inc., "MATLAB Pricing," [Online]. Available: https://www.mathworks.com/pricing-licensing.html. [Accessed 27 March 2026].

[11] The MathWorks, Inc., "Download and Install MATLAB," [Online]. Available: https://www.mathworks.com/help/install/ug/install-products-with-internet-connection.html. [Accessed 27 March 2026].

[12] The MathWorks, Inc., "GPU Computing," [Online]. Available: https://www.mathworks.com/help/parallel-computing/gpu-computing.html. [Accessed 27 March 2026].

[13] OpenCV, "Arithmetic Operations on Images," [Online]. Available: https://docs.opencv.org/4.x/dd/d4d/tutorial_js_image_arithmetics.html. [Accessed 2 April 2026].

[14] K. Patel, "AI-Driven Defect Detection in PCB Manufacturing: A Computer Vision Approach Using Convolutional Neural Networks," [Online]. Available: https://www.researchgate.net/publication/393145942_AI-Driven_Defect_Detection_in_PCB_Manufacturing_A_Computer_Vision_Approach_Using_Convolutional_Neural_Networks#:~:text=Classic%20machine%20vision%20approaches%2C%20such,test%20PCB%20image%20and%20a. [Accessed 2 April 2026].

[15] S. A, K. D. Sonal, P. B. G, M. B. S and P. H. D, "PCB Defect Detection Using Image Subtraction Algorithm," [Online]. Available: https://www.ijcstjournal.org/volume-3/issue-3/IJCST-V3I3P1.pdf. [Accessed 2 April 2026].

[16] A. Allan, "Benchmarking Raspberry Pi 5," [Online]. Available: https://www.raspberrypi.com/news/benchmarking-raspberry-pi-5/#:~:text=Single%2Dcore%20scores%20for%20Geekbench,increase%20over%20Raspberry%20Pi%204. [Accessed 2 April 2026].

[17] Ultra Librarian, "PCB Design Verification in Prototyping and the Transition to Production," 9 December 2021. [Online]. Available: https://www.ultralibrarian.com/2021/12/09/pcb-design-verification-in-prototyping-and-the-transition-to-production-ulc/. [Accessed 2 April 2026].

[18] H. Zhang, Y. Li, D. Md Sharid Kayes, Z. Song and Y. Wang, "Research on PCB defect detection algorithm based on LPCB-YOLO," 2 January 2025. [Online]. Available: https://www.frontiersin.org/journals/physics/articles/10.3389/fphy.2024.1472584/full. [Accessed 2 April 2026].

[19] Ultralytics, "Explore Ultralytics YOLOv8," [Online]. Available: https://yolov8.com. [Accessed 1 April 2026].

[20] O. Ronneberger, P. Fischer and T. Brox, "U-Net: Convolutional Networks for Biomedical Image Segmentation," [Online]. Available: https://lmb.informatik.uni-freiburg.de/people/ronneber/u-net/.

[21] K. He, G. Gkioxari, P. Dollár and R. Girshick, "Mask R-CNN," 24 January 2018. [Online]. Available: https://arxiv.org/abs/1703.06870. [Accessed 2 April 2026].

[22] IBM, "What is an autoencoder?," [Online]. Available: https://www.ibm.com/think/topics/autoencoder. [Accessed 2 April 2026].

[23] S. Khalilian, Y. Hallaj, A. Balouchestani, H. Karshenas and A. Mohammadi, "PCB Defect Detection Using Denoising Convolutional Autoencoders," 14 September 2020. [Online]. Available: https://ieeexplore.ieee.org/document/9187485. [Accessed 2 April 2026].

[125] Z. Ni and Y. Kim, "Research on Printed Circuit Board (PCB) Defect Detection Algorithm Based on Convolutional Neural Networks (CNN)," 12 December 2025. [Online]. Available: https://www.mdpi.com/2076-3417/15/24/13115#:~:text=The%20experimental%20results%20showed%20that,respectively%2C%20enabling%20reliable%20automated%20inspection. [Accessed 1 April 2026].

[126] Jidoka, "AOI Inspection Machine & AI: How to Implement it Correctly," [Online]. Available: https://www.jidoka-tech.ai/blogs/aoi-inspection-machine-ai-implementation-guide. [Accessed 1 April 2026].

[127] Emergent Mind, "DeepPCB: PCB Defect Detection Dataset," 6 February 2026. [Online]. Available: https://www.emergentmind.com/topics/deeppcb-dataset. [Accessed 2 April 2026].

[128] IBM, "Compiled versus interpreted languages," [Online]. Available: https://www.ibm.com/docs/en/zos-basic-skills?topic=zos-compiled-versus-interpreted-languages. [Accessed 2 April 2026].

[129] M. Hertz and E. D. Berger, "Quantifying the performance of garbage collection vs. explicit memory management," [Online]. Available: https://dl.acm.org/doi/10.1145/1094811.1094836. [Accessed 2 April 2026].

[130] S. Garcia, "Rust vs C++ for Embedded Systems: A Comprehensive Comparison (2025)," [Online]. Available: https://cppcat.com/rust-vs-c-for-embedded-systems/. [Accessed 1 April 2026].

[131] C. McArthur, "Breaking down the 2024 Survey Results," [Online]. Available: https://moderncppdevops.com/2024-survey-results/. [Accessed 2 April 2026].

[132] Arduino, "About Arduino," Arduino, [Online]. Available: https://www.arduino.cc/en/about/. [Accessed 1 April 2026].

[132] Espressif, "arduino-esp32," GitHub, [Online]. Available: https://github.com/espressif/arduino-esp32. [Accessed 1 April 2026].

[133] STM32duino Community, "Arduino_Core_STM32," GitHub, [Online]. Available: https://github.com/stm32duino/Arduino_Core_STM32. [Accessed 1 April 2026].

[134] Arduino, "Arduino / C++," [Online]. Available: https://docs.arduino.cc/arduino-cloud/guides/arduino-c/. [Accessed 1 April 2026].

[135] Microsoft, "Visual Studio Code," [Online]. Available: https://code.visualstudio.com/. [Accessed 1 April 2026].

[136] PlatformIO, "PlatformIO IDE for VSCodeℑ," [Online]. Available: https://docs.platformio.org/en/latest/integration/ide/vscode.html. [Accessed 1 April 2026].

[137] Espressif, "Getting Started with ESP-IDF," [Online]. Available: https://idf.espressif.com/. [Accessed 1 April 2026].

[138] Microsoft, [Online]. Available: https://code.visualstudio.com/docs/python/python-tutorial. [Accessed 1 April 2026].

[139]

[140] PlatformIO, "J-LINK," [Online]. Available: https://docs.platformio.org/en/stable/plus/debug-tools/jlink.html. [Accessed 1 April 2026].

[141] Eclipse Foundation, "Eclipse CDT," [Online]. Available: https://projects.eclipse.org/projects/tools.cdt. [Accessed 1 April 2026].

[142] Eclipse Foundation, "Eclipse Embedded CDT (C/C++ Development Tools)," [Online]. Available: https://projects.eclipse.org/projects/iot.embed-cdt. [Accessed 1 April 2026].

[143] JetBrains, "How does PyCharm match up against competing tools?," [Online]. Available: https://resources.jetbrains.com/storage/products/pycharm/docs/Comparisons_PyCharm.pdf. [Accessed 1 April 2026].

[144] JetBrains, "PyCharm," [Online]. Available: https://www.jetbrains.com/pycharm/. [Accessed 1 April 2026].

[145] eng.lbl.gov, "IPC-2221A Generic standard on printer board design," IPC, [Online]. Available: https://www-eng.lbl.gov/. [Accessed 31 w03 2026].

[146] I. e. commision, "IEC 62680-1-2 USB-C part 1 of 2 standard," IEC, [Online]. Available: https://webstore.iec.ch/en/publication/72368. [Accessed 31 03 2026].

[147] S. Campbell, "Basics of the I2C Communication Protocol," Circuit Basics, [Online]. Available: https://www.circuitbasics.com/basics-of-the-i2c-communication-protocol/. [Accessed 14 March 2026].

[147] J. Wu, "Basics of SPI: Serial Communications," Texas Instruments, 2020. [Online]. Available: https://www.ti.com/content/dam/videos/external-videos/en-us/6/3816841626001/6163521589001.mp4/subassets/basics-of-spi-serial-communications-presentation.pdf. [Accessed 14 March 2026].

[149] S. Campbell, "Basics of the SPI Communication Protocol," Circuit Baisics, [Online]. Available: https://www.circuitbasics.com/basics-of-the-spi-communication-protocol/. [Accessed 14 March 2026].

[150] S. Campbell, "Basics of UART Communication," Circuit Basics, [Online]. Available: https://www.circuitbasics.com/basics-uart-communication/. [Accessed 15 March 2026].

[151] Texas Instruments, "UART Lecture," Texas Instruments, 2018. [Online]. Available: https://www.ti.com/lit/ml/swrp216/swrp216.pdf?ts=1773606961462&ref_url=https%253A%252F%252Fduckduckgo.com%252F. [Accessed 15 March 2026].

[152] J. Shah, "How USB Works: Introduction (Part 1)," Circuit Bread, 12 April 2024. [Online]. Available: https://www.circuitbread.com/tutorials/how-usb-works-introduction-part-1. [Accessed 15 March 2026].

[153] J. Shah, "Understanding CAN: A Beginner's Guide to the Controller Area Network Protocol," Circuit Bread, 21 Febuary 2024. [Online]. Available: https://www.circuitbread.com/tutorials/understanding-can-a-beginners-guide-to-the-controller-area-network-protocol. [Accessed 15 March 2026].

[154] Ucamco, "The Gerber Layer Format," May 2024. [Online]. Available: https://www.ucamco.com/files/downloads/file_en/456/gerber-layer-format-specification-revision-2024-05_en.pdf?062f499e1049b8398b808f46167629ee. [Accessed 2026 Febuary 2026].

[155] T. R. Kramer, F. M. Proctor and E. Messina, "The NIST RS274NGC Interpreter - Version 3," 17 August 2000. [Online]. Available: https://tsapps.nist.gov/publication/get_pdf.cfm?pub_id=823374. [Accessed 25 Febuary 2026].

[156] Ciwenkai, "FR4 Epoxy-Sheet Resin Glass-Fiber Insulation-Plate - 335X300X2.0MM Green," Amazon, [Online]. Available: https://www.amazon.com/Epoxy-Sheet-Resin-Glass-Fiber-Insulation-Plate-335%C3%97300%C3%974mm/dp/B0BJD2Y6T7/ref=sr_1_12?crid=I7WANXAQ4F08&dib=eyJ2IjoiMSJ9.4QbJsUDcjtXYUDu0gSJoe88UsO4F51ZONzzd109XFnaz2u5USNsO6gLQ7iAsuxj-khOqpj3r2Bt_1P29A-lQxTeWOlvRNJkwt3IcCL. [Accessed 24 March 2026].

[157] Voltera, "Consumables," Voltera, [Online]. Available: https://store.voltera.io/collections/consumables?filter.p.m.custom.product_type=Inks. [Accessed 24 March 2026].

[158] Anthropic, "Claude ai," Anthropic, [Online]. Available: https://claude.ai/chat/9e30956d-8706-4aa1-b49a-a66d9f25f734. [Accessed 27 03 2022].

[159] ChatGPT, "Filling Out DRV8825 Column," [Online]. Available: https://chatgpt.com/share/69cee37e-a960-832a-bb68-6ccadcc11447.

[160] Google Gemini, "Budget PCB Photography Camera Recommendations," [Online]. Available: https://gemini.google.com/share/e342d79fc887. [Accessed 3 April 2026].

[161] Google Gemini, "Macro vs. Microscope for PCB Traces," [Online]. Available: https://gemini.google.com/share/962c006de736. [Accessed 3 April 2026].

[162] ChatGPT, "Conductive Ink and Nozzle," [Online]. Available: https://chatgpt.com/share/69cee671-2528-8331-8519-6739f5cbb40b. [Accessed 3 April 2026].

[163] Texas Instruments, "LM2576xx Series SIMPLE SWITCHER® Power Converter 3-A Step-Down Voltage," Texas Instruments, March 2023. [Online]. Available: https://www.ti.com/lit/ds/symlink/lm2576.pdf?ts=1775036324983&ref_url=https%253A%252F%252Fwww.ti.com%252Fproduct%252FLM2576%253Futm_source%253Dgoogle%2526utm_medium%253Dcpc%2526utm_campaign%253Dti-null-null-xref-cpc-pf-google-ww_en_cons%2526utm_content%25. [Accessed 2 April 2026].

[164] Texas instruments, "WEBENCH? Power designer," Texas Instruments, [Online]. Available: https://webench.ti.com/power-designer/. [Accessed 27 03 2026].

[165] OpenCV, "Operations on arrays," [Online]. Available: https://docs.opencv.org/3.4/d2/de8/group__core__array.html. [Accessed 1 April 2026].

[166] Moukthika, "Cropping an Image Using OpenCV," [Online]. Available: https://opencv.org/cropping-an-image-using-opencv/. [Accessed 1 April 2026].

[167] A. Huamán, "Adding (blending) two images using OpenCV," [Online]. Available: https://docs.opencv.org/4.x/d5/dc4/tutorial_adding_images.html. [Accessed 1 April 2026].

[168] Moukthika, "Image Filtering using Convolution in OpenCV," [Online]. Available: https://opencv.org/blog/image-filtering-using-convolution-in-opencv/#h-sharpening-an-image. [Accessed 1 April 2026].

[169] OpenCV, "Histograms - 2: Histogram Equalization," [Online]. Available: https://docs.opencv.org/4.x/d5/daf/tutorial_py_histogram_equalization.html. [Accessed 1 April 2026].

[170] OpenCV, "Thresholding Operations using inRange," [Online]. Available: https://docs.opencv.org/3.4/da/d97/tutorial_threshold_inRange.html. [Accessed 1 April 2026].

[171] ChatGPT, "Modifying 3D Printer Heat Bed," [Online]. Available: https://chatgpt.com/s/t_69cda1da76f481918dda4c0d1355a9f4 . [Accessed 3 April 2026].

[172] ChatGPT, "Modifying Creality Ender 3 Heatbed," [Online]. Available: https://chatgpt.com/s/t_69cda22fb8208191a229687a020a0f52. [Accessed 3 April 2026].

[173] ChatGPT, "Comparison Table of Heatbeds," [Online]. Available: https://chatgpt.com/s/t_69cdbcd4499c81918478a26413faf693. [Accessed 3 April 2026].

[174] CREOL, The College of Optics and Photonics, "Project showcases," [Online]. Available: https://creol.ucf.edu/academics/senior-design/spring-2025/. [Accessed 25 Jan 2026].

[175] Voltera Inc., "Voltera V-one PCB Printer: Drill, dispense, and reflow," [Online]. Available: https://store.voltera.io/products/v-one. [Accessed 21 January 2026].

[176] Voltera Inc., "Flexible material dispensing - nova printed electronics platform," [Online]. Available: https://www.voltera.io/products/nova. [Accessed 25 January 2026].

[176] Electroninks, "Circuit Jet," [Online]. Available: https://electroninks.com/circuit-jet/ . [Accessed 25 January 2026].

[177] Maximous, "Print conductive circuits with an inkjet printer," Instructables, [Online]. Available: https://www.instructables.com/Print-Conductive-Circuits-With-An-Inkjet-Printer/ . [Accessed January 2026].

[178] Optomec, "AJ 5X," [Online]. Available: https://optomec.com/aj-5x/. [Accessed 2026 January Jan].

[179] Adafruit, "PCF8575," Adafruit, [Online]. Available: https://www.adafruit.com/product/5611. [Accessed 22 03 2026].

[180] Adafruit, "MCP23017," Adafruit, [Online]. Available: https://www.adafruit.com/product/5346. [Accessed 22 03 2026].

[181] Adafruit, "AW9523," Adafruit, [Online]. Available: https://www.adafruit.com/product/4886. [Accessed 22 03 2026].

[182] Pololu, "Stepper motor driver cataologue," Pololu, [Online]. Available: https://www.pololu.com/category/120/stepper-motor-drivers. [Accessed 22 03 2026].

[184] STMmicroelectronics, "STM32 32-bit Arm cortex MCU's," STMelectronics, [Online]. Available: https://www.st.com/en/microcontrollers-microprocessors/stm32-32-bit-arm-cortex-mcus.html. [Accessed 22 03 2026].

[185] Sparkfun, "Bi-Directional Logic Level Converter Hookup Guide," Sparkfun, [Online]. Available: https://learn.sparkfun.com/tutorials/bi-directional-logic-level-converter-hookup-guide/all. [Accessed 22 03 2026].

[186] Duet3D, "Duet3 mainboard 6HC," [Online]. Available: https://github.com/Duet3D/Duet3-Mainboard-6HC. [Accessed 22 03 2026].

[187] CrystalFontz, "CrystalFontz," [Online]. Available: https://www.crystalfontz.com/product/cfaf320240f035tts-lcd-module-tft-320x240-graphic-touch-screen#variant. [Accessed 24 03 2026].

[188] BuyDisplayz, "BuyDisplayz," EastRising, [Online]. Available: https://www.buydisplay.com/download/manual/ER-TFT3.51-1_Datasheet.pdf. [Accessed 24 03 2026].

[189] Analog Devices, "Mastering Precision: Understanding Microstepping in Motion Control," Analog Devices, [Online]. Available: https://www.analog.com/en/resources/analog-dialogue/articles/mastering-precision-understanding-microstepping.html. [Accessed 24 03 2026].

[190] Voltera, "Conductor 3," 22 January 2026. [Online]. Available: https://files.gitbook.com/v0/b/gitbook-x-prod.appspot.com/o/spaces%2FKMS1I2mCuOJeZyXjzOqV%2Fuploads%2F3lSQDtipbeT5ch4LjUSU%2FConductor%203%20Technical%20Data%20Sheet.pdf?alt=media&token=82077e7b-cb96-4080-a26a-660e25ecb76a. [Accessed 25 March 2026].

[191] Microchip, "ATtiny85," Microchip, [Online]. Available: https://www.microchip.com/en-us/product/attiny85. [Accessed 22 03 2026].

[192] Digikey, "Logic translator - 74LVC," Digikey, [Online]. Available: https://www.digikey.com/en/products/detail/diodes-incorporated/74LVC1T45W6-7/5427267. [Accessed 31 03 2026].

[193] Raspberry Pi, "I/O Controller," [Online]. Available: https://www.raspberrypi.com/documentation/computers/io-controllers.html. [Accessed 31 March 2026].

[194] Texas instruments, "LM2576 voltage regulator datasheet," Textas instruments, [Online]. Available: https://www.ti.com/lit/ds/symlink/lm2576.pdf?ts=1775000387097&ref_url=https%253A%252F%252Fwww.ti.com%252Fproduct%252FLM2576%253Futm_source%253Dgoogle%2526utm_medium%253Dcpc%2526utm_campaign%253Dapp-bsr-null-44700045336317452_prodfolderdynamic-cpc-pf-googl. [Accessed 02 04 2026].

[195] Texas instrumentes, "TPS54231 voltage regulator," Texas instrumentes, [Online]. Available: https://www.ti.com/lit/ds/symlink/tps54231.pdf?ts=1775144661786&ref_url=https%253A%252F%252Fwww.ti.com%252Fproduct%252FTPS54231. [Accessed 02 04 2026q].

Appendix B – Copyright Permissions

Dear Mr. Baker,

It is quite OK to cite from the Gerber specification in your report as long as these are properly referenced.

A copy of you finished work would be much appreciated.

Wkr,

Karel Tavernier,
Ucamco

Figure 12 - Gerber Standard Permission from Ucamco

Appendix C – Data Sheets

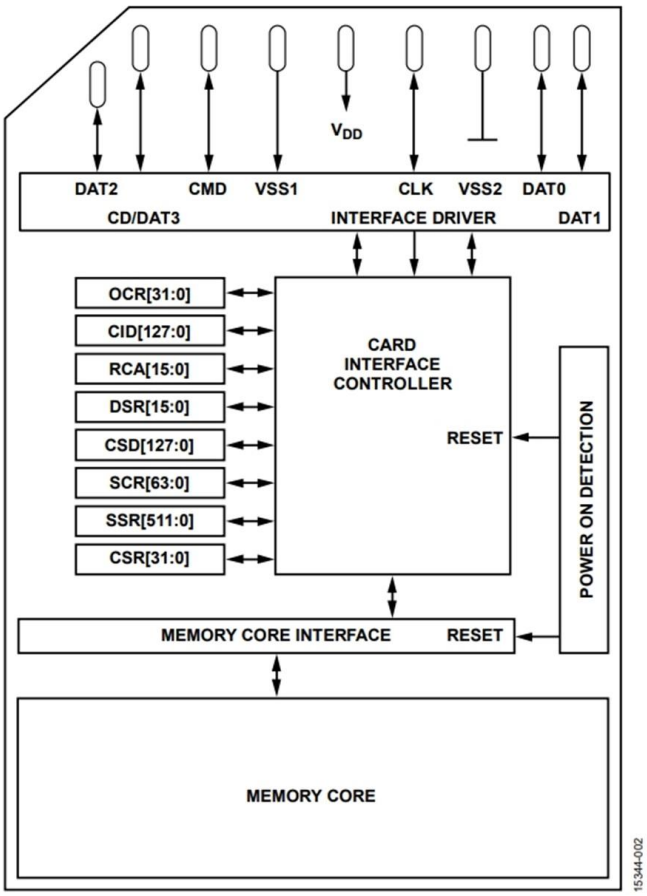

Figure 13 – SD card architecture and layout

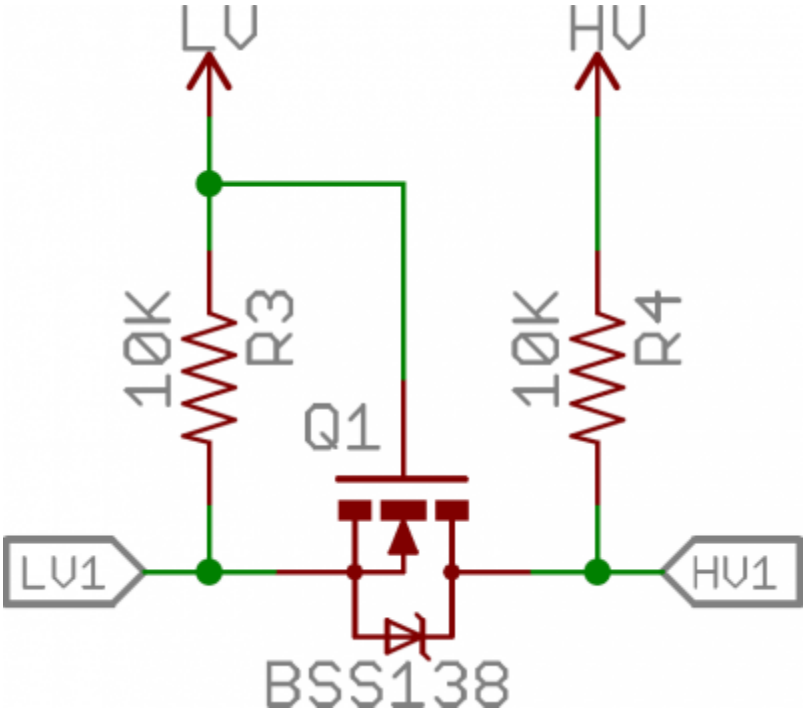

Figure 14 - Logic Level Shifter

Appendix D – Software Code

Appendix E – AI Prompts and Outcomes

Minimum Requirements for 3D Printer Control

Prompt:

"I want to use a Microcontroller that is able to operate a 3D printer using marlin or klipper as firmware. I want to be sure that there is enough GPIO, communication pins, processing speed and clock controls to operate the system."

Answer:

GPIO/Pin Requirements:

- **Stepper drivers:** 15-18 pins (5 motors × 3 pins: STEP, DIR, ENABLE)
- **Endstops:** 3-6 digital inputs
- **Heaters:** 2-3 PWM outputs (hotend, bed, optional chamber)

- **Temperature sensors:** 2-4 ADC inputs (thermistors/thermocouples)
- **Fans:** 3-5 PWM outputs
- **Probe/BLTouch:** 2-3 pins (servo + sensor)
- **Total minimum:** ~35-45 GPIO pins

Communication Interfaces:

SPI (for SD card and/or display)

I2C or SPI (for display)

UART/USB (for host communication)

Optional: WiFi/Ethernet

Processing Requirements:

Marlin: 72+ MHz recommended (can run on slower, but with limitations)

Klipper: Less demanding on MCU (offloads to Raspberry Pi), 48+ MHz adequate

RAM: 64KB minimum, 128KB+ recommended

Flash: 256KB minimum, 512KB+ recommended

Recommended Microcontrollers

1. STM32F446 (Best Overall)

Clock: 180 MHz

RAM: 128 KB

Flash: 512 KB

GPIO: 80+ pins

Pros: Excellent performance, widely supported by both Marlin and Klipper, abundant peripherals

Boards: FYSETC S6, BTT SKR Pro

2. STM32F407 (Popular Choice)

Clock: 168 MHz

RAM: 192 KB

Flash: 512 KB-1 MB

GPIO: 80+ pins

Pros: Very popular, proven reliability, good community support

Boards: BTT SKR Pro, MKS SBASE

3. STM32H743 (High Performance)

Clock: 480 MHz

RAM: 1 MB

Flash: 2 MB

Pros: Overkill for most applications but future-proof

Boards: BTT Octopus Pro H7

4. RP2040 (Budget-Friendly Modern Option)

Clock: 133 MHz dual-core

RAM: 264 KB

Flash: 2-16 MB (external)

GPIO: 26 pins (requires careful planning or expanders)

Pros: Low cost, good performance, works well with Klipper

Boards: BTT SKR Pico, Fysetc RP2040

5. ESP32 (For Klipper with WiFi)

Clock: 240 MHz dual-core

RAM: 520 KB

Pros: Built-in WiFi, good for Klipper, low cost

Cons: Limited to Klipper (Marlin support is experimental)

Key Considerations

For Marlin:

- Choose STM32F4 or higher (F446, F407, H7 series)
- Need more processing power on-board since Marlin runs entirely on MCU

For Klipper:

- More flexible - can use lower-spec MCUs (even AVR in some cases)
- Processing is split between MCU and Raspberry Pi host
- ESP32 is viable and adds WiFi capability

My Recommendation: Start with an **STM32F446** or **STM32F407** based board. These offer:

- More than enough GPIO and peripherals
- Excellent support in both Marlin and Klipper
- Strong community support and documentation
- Room for expansion (extra extruders, chamber heater, etc.)

Would you like specific board recommendations, or do you need help calculating exact pin requirements for your specific printer configuration?

Modifying Marlin 2.0 Firmware

Prompt:

"how can i modify the marlin 2.0 firmware to allow me to use a tft display with an esp 32. there is already a HAL for the stm 32 that uses the tft. Can I copy it and modify to add that functionality with the esp 32"

Answer:

You are definitely on the right track by looking at how the STM32 handles it, but the short answer is: **No, you cannot simply copy and paste the STM32 HAL to the ESP32.** Here is the reality of the situation: Hardware Abstraction Layers (HALs) are, by definition, intimately tied to the specific silicon of the microcontroller. The STM32 HAL interacts with ST's specific hardware registers, Direct Memory Access (DMA) controllers, and often utilizes the FSMC (Flexible Static Memory Controller) for parallel displays. The ESP32 uses completely different underlying hardware, an entirely different framework (ESP-IDF/ESP32 Arduino Core), and typically relies on high-speed SPI (VSPI/HSPI) or I2S for driving displays.

However, you **can** copy the *architecture* of what the STM32 does and rewrite the low-level hardware interactions for the ESP32.

Here is a breakdown of how Marlin handles TFTs and how you can implement this for the ESP32.

1. Understand Marlin's TFT Architecture

Marlin abstracts displays into a few layers:

- **The UI Layer:** (src/lcd/tft/) This handles drawing buttons, text, and menus. It is completely hardware-independent.

- **The Shared TFT Engine:** (src/HAL/shared/tft/) This contains generic implementations for things like SPI displays (tft_spi.cpp).
- **The HAL IO Layer:** (src/HAL/HAL_STM32/tft/ or src/HAL/HAL_ESP32/tft/) This is the bottom layer. It translates Marlin's drawing commands into the specific 1s and 0s sent over the microcontroller's pins.

2. Determine Your Interface (SPI vs. Parallel)

Before writing any code, you need to know how your TFT communicates:

- **SPI (Most likely for ESP32):** If your display uses SPI (MOSI, MISO, SCK, CS), Marlin already has a shared SPI TFT driver in src/HAL/shared/tft/tft_spi.cpp. You might not need to write a custom HAL layer from scratch. You simply need to ensure the ESP32 SPI HAL is fully implemented and point Marlin to the shared SPI TFT driver.
- **Parallel (8-bit or 16-bit):** This is where STM32 uses FSMC. The ESP32 does not have FSMC. To drive a parallel display on an ESP32, you would have to write a custom tft_io.cpp in the ESP32 HAL folder that bit-bangs the GPIO pins or uses the ESP32's I2S peripheral in parallel mode (which is quite advanced).

3. Steps to Implement (The "Adaptation" Process)

If you need to build or modify the ESP32 TFT HAL, here is the roadmap:

Step A: Examine the STM32 Code as a Template Look at src/HAL/HAL_STM32/tft/tft_io.cpp and tft_io.h. Pay attention to the required functions Marlin expects the HAL to provide, such as:

- TFT_IO::InitTFT()
- TFT_IO::WriteData()
- TFT_IO::WriteReg()

Step B: Create the ESP32 Equivalent You will need to create (or modify if a stub exists) src/HAL/HAL_ESP32/tft/tft_io.cpp. Inside those required functions, you will use the ESP32's native libraries. For example, instead of STM32 DMA calls, you will use SPI.transfer() or ESP-IDF's spi_device_transmit().

Step C: Define Pins You will need to map your display pins in your specific board's pin file (e.g., src/pins/esp32/pins_YOUR_BOARD.h).

C++

```
#define TFT_CS_PIN   ...

#define TFT_RS_PIN   ... // Also known as DC (Data/Command)

#define TFT_RST_PIN  ...
```

Step D: Update Configurations In Configuration_adv.h, you will need to enable TFT_COLOR_UI or TFT_CLASSIC_UI and define your specific display controller (e.g., TFT_ILI9341, TFT_ST7789).

A Quick Word of Advice

Before you dive into deep firmware modification, I highly recommend checking out the **Marlin** bugfix-2.1.x **branch**. The ESP32 HAL has received massive upgrades recently, and native support for several SPI TFTs on ESP32 boards (like the MKS TinyBee) has already been merged. You might find that the heavy lifting has already been done for you in a newer version!

To help you narrow this down, what specific ESP32 motherboard and which exact TFT display model (or controller chip, like ILI9341) are you trying to pair together?

You said

we are trying to use the esp 32 wroom 32 board. In the marlin firmware it is being listed as a generic esp32. when I tried to build the firmware before uploading it i was given this error message

In file included from Marlin\src\HAL\ESP32\../../inc/MarlinConfig.h:63:0,

from Marlin\src\HAL\ESP32\HAL.cpp:24:

Marlin\src\HAL\ESP32\../../inc/../HAL/ESP32/inc/SanityCheck.h:25:4: error: #error "Sorry! TFT displays are not available for HAL/ESP32."

#error "Sorry! TFT displays are not available for HAL/ESP32."

^

In file included from Marlin\src\HAL\ESP32\../../inc/MarlinConfig.h:63:0,

from Marlin\src\HAL\ESP32\Servo.cpp:24:

Marlin\src\HAL\ESP32\../../inc/../HAL/ESP32/inc/SanityCheck.h:25:4: error: #error "Sorry! TFT displays are not available for HAL/ESP32."

#error "Sorry! TFT displays are not available for HAL/ESP32."

^

In file included from Marlin\src\HAL\ESP32\../../inc/MarlinConfig.h:63:0,

from Marlin\src\HAL\ESP32\HAL_SPI.cpp:24:

Marlin\src\HAL\ESP32\../../inc/../HAL/ESP32/inc/SanityCheck.h:25:4: error: #error "Sorry! TFT displays are not available for HAL/ESP32."

#error "Sorry! TFT displays are not available for HAL/ESP32."

^

In file included from Marlin\src\HAL\ESP32\../../inc/MarlinConfig.h:63:0,

```
                 from Marlin\src\HAL\ESP32\Tone.cpp:32:
Marlin\src\HAL\ESP32\../../inc/../HAL/ESP32/inc/SanityCheck.h:25:4:    error:    #error
"Sorry! TFT displays are not available for HAL/ESP32."
  #error "Sorry! TFT displays are not available for HAL/ESP32."
   ^
In file included from Marlin\src\HAL\ESP32\../../inc/MarlinConfig.h:63:0,
                 from Marlin\src\HAL\ESP32\eeprom.cpp:24:
Marlin\src\HAL\ESP32\../../inc/../HAL/ESP32/inc/SanityCheck.h:25:4:    error:    #error
"Sorry! TFT displays are not available for HAL/ESP32."
  #error "Sorry! TFT displays are not available for HAL/ESP32."
   ^
Compiling .pio\build\esp32\src\src\MarlinCore.cpp.o
In file included from Marlin\src\HAL\ESP32\../../inc/MarlinConfig.h:63:0,
                 from Marlin\src\HAL\ESP32\timers.cpp:30:
Marlin\src\HAL\ESP32\../../inc/../HAL/ESP32/inc/SanityCheck.h:25:4:    error:    #error
"Sorry! TFT displays are not available for HAL/ESP32."
  #error "Sorry! TFT displays are not available for HAL/ESP32."
   ^
In file included from Marlin\src\HAL\ESP32\../../inc/MarlinConfig.h:63:0,
                 from Marlin\src\HAL\ESP32\u8g_esp32_spi.cpp:26:
Marlin\src\HAL\ESP32\../../inc/../HAL/ESP32/inc/SanityCheck.h:25:4:    error:    #error
"Sorry! TFT displays are not available for HAL/ESP32."
  #error "Sorry! TFT displays are not available for HAL/ESP32."
   ^
In file included from Marlin\src\HAL\ESP32\../../module/../inc/MarlinConfig.h:63:0,
                 from Marlin\src\HAL\ESP32\../../module/stepper.h:44,
                 from Marlin\src\HAL\ESP32\i2s.cpp:35:
Marlin\src\HAL\ESP32\../../module/../inc/../HAL/ESP32/inc/SanityCheck.h:25:4:    error:
#error "Sorry! TFT displays are not available for HAL/ESP32."
  #error "Sorry! TFT displays are not available for HAL/ESP32."
   ^
```

```
*** [.pio\build\esp32\src\src\HAL\ESP32\Servo.cpp.o] Error 1
*** [.pio\build\esp32\src\src\HAL\ESP32\HAL.cpp.o] Error 1
*** [.pio\build\esp32\src\src\HAL\ESP32\HAL_SPI.cpp.o] Error 1
*** [.pio\build\esp32\src\src\HAL\ESP32\Tone.cpp.o] Error 1
*** [.pio\build\esp32\src\src\HAL\ESP32\eeprom.cpp.o] Error 1
*** [.pio\build\esp32\src\src\HAL\ESP32\u8g_esp32_spi.cpp.o] Error 1
*** [.pio\build\esp32\src\src\HAL\ESP32\timers.cpp.o] Error 1
In file included from Marlin\src\HAL\shared\../../inc/MarlinConfig.h:63:0,
                 from Marlin\src\HAL\shared\HAL.cpp:27:
Marlin\src\HAL\shared\../../inc/../HAL/ESP32/inc/SanityCheck.h:25:4: error: #error "Sorry! TFT displays are not available for HAL/ESP32."
  #error "Sorry! TFT displays are not available for HAL/ESP32."
   ^
In file included from Marlin\src\HAL\shared\../../inc/MarlinConfig.h:63:0,
                 from Marlin\src\HAL\shared\Delay.cpp:25:
Marlin\src\HAL\shared\../../inc/../HAL/ESP32/inc/SanityCheck.h:25:4: error: #error "Sorry! TFT displays are not available for HAL/ESP32."
  #error "Sorry! TFT displays are not available for HAL/ESP32."
   ^
*** [.pio\build\esp32\src\src\HAL\ESP32\i2s.cpp.o] Error 1
In file included from Marlin\src\HAL\shared\../../core/../inc/MarlinConfig.h:63:0,
                 from Marlin\src\HAL\shared\../../core/serial.h:24,
                 from Marlin\src\HAL\shared\MinSerial.h:24,
                 from Marlin\src\HAL\shared\MinSerial.cpp:22:
Marlin\src\HAL\shared\../../core/../inc/../HAL/ESP32/inc/SanityCheck.h:25:4: error: #error "Sorry! TFT displays are not available for HAL/ESP32."
  #error "Sorry! TFT displays are not available for HAL/ESP32."
   ^
*** [.pio\build\esp32\src\src\HAL\shared\HAL.cpp.o] Error 1
*** [.pio\build\esp32\src\src\HAL\shared\Delay.cpp.o] Error 1
In file included from Marlin\src\HAL\shared\../../inc/MarlinConfig.h:63:0,
```

from Marlin\src\HAL\shared\esp_wifi.cpp:23:

Marlin\src\HAL\shared\../../inc/../HAL/ESP32/inc/SanityCheck.h:25:4: error: #error "Sorry! TFT displays are not available for HAL/ESP32."

#error "Sorry! TFT displays are not available for HAL/ESP32."

^

In file included from Marlin\src\HAL\shared\../../inc/MarlinConfig.h:63:0,

from Marlin\src\HAL\shared\servo.cpp:53:

Marlin\src\HAL\shared\../../inc/../HAL/ESP32/inc/SanityCheck.h:25:4: error: #error "Sorry! TFT displays are not available for HAL/ESP32."

#error "Sorry! TFT displays are not available for HAL/ESP32."

^

*** [.pio\build\esp32\src\src\HAL\shared\MinSerial.cpp.o] Error 1

In file included from Marlin\src\inc/MarlinConfig.h:63:0,

from Marlin\src\MarlinCore.h:24,

from Marlin\src\MarlinCore.cpp:31:

Marlin\src\inc/../HAL/ESP32/inc/SanityCheck.h:25:4: error: #error "Sorry! TFT displays are not available for HAL/ESP32."

#error "Sorry! TFT displays are not available for HAL/ESP32."

^

*** [.pio\build\esp32\src\src\HAL\shared\esp_wifi.cpp.o] Error 1

*** [.pio\build\esp32\src\src\HAL\shared\servo.cpp.o] Error 1

*** [.pio\build\esp32\src\src\MarlinCore.cpp.o] Error 1

Gemini said

That error message is the smoking gun! It tells us exactly what is going on: **The specific version of Marlin you are using has a hardcoded block preventing TFTs on the ESP32.** Marlin uses a file called SanityCheck.h for every microcontroller architecture to prevent you from compiling configurations that are known to be broken or unimplemented. In your version of Marlin, the developers explicitly added the line #error "Sorry! TFT displays are not available for HAL/ESP32." because the low-level code we talked about earlier (the tft_io.cpp stuff) simply doesn't exist in that folder yet.

Here is how you can move forward, depending on how much you want to tinker.

Option 1: The Best Path (Upgrade Marlin)

The ESP32 HAL was heavily under development during the Marlin 2.0.x lifecycle. If you are using an older 2.0.x release, it won't have the display support you need.

1. **Download** bugfix-2.1.x**:** Head over to the official Marlin GitHub and download the absolute latest bugfix-2.1.x branch.
2. **Check the new SanityCheck:** In the newer versions, massive improvements were made to the ESP32 HAL. Support for SPI-based TFT displays (like the ILI9341 or ST7789) was added, and that hardcoded #error block was removed or modified to allow specific SPI displays.
3. **Transfer Configs:** Manually migrate your Configuration.h and Configuration_adv.h settings to the new 2.1.x format. Do not just copy and paste the old files, as the formatting changes between versions.

Option 2: The "Serial Smart Display" Workaround

If you are using a "Smart Display" (like the BigTreeTech TFT35 or MKS TFT32), you are actually going about this the wrong way!

- **How Smart Displays Work:** These displays have their own onboard processor. They don't rely on Marlin's TFT HAL to draw pixels. Instead, they act like a tiny computer talking to Marlin over a standard Serial (RX/TX) connection, sending G-code commands back and forth.
- **The Fix:** If this is the type of display you have, you need to **disable** TFT_COLOR_UI, TFT_CLASSIC_UI, and any other TFT screen definitions in Configuration.h. Instead, you simply enable an extra serial port (e.g., SERIAL_PORT_2) and set the baud rate to match your screen (usually 115200 or 250000). The ESP32 will just think it's talking to a USB host.

Option 3: The Hard Way (Writing the HAL yourself)

If you are determined to stay on your exact current version of Marlin and write the custom SPI/Parallel drivers we discussed in the previous message, you have to bypass the bouncer first.

1. Open Marlin\src\HAL\ESP32\inc\SanityCheck.h.
2. Navigate to line 25 (as indicated by your error).
3. Delete or comment out the #error line: // #error "Sorry! TFT displays are not available for HAL/ESP32."
4. **Warning:** When you hit compile again, you will instantly get a cascade of new errors complaining about missing functions (InitTFT, WriteData, etc.). This means you have successfully bypassed the sanity check and are now hitting the missing HAL implementation that you will have to write from scratch.

To help give you the most accurate path forward: **What exact TFT display are you trying to hook up to this ESP32 WROOM board?** (Is it a bare screen with an ILI9341 chip, or a boxed smart display like a BTT TFT35?)

Describing Different Stepper Motor Drivers

Prompt:

“I am trying to write out a description of 2 differnt type of stepper motor drivers.”

Answer:

This conversation was generated with Duck.ai (https://duck.ai) using OpenAI's GPT-5 mini Model. AI chats may display inaccurate or offensive information (see https://duckduckgo.com/duckai/privacy-terms for more info).

==========

User prompt 1 of 1 - 4/1/2026, 1:53:03 PM:

I am trying to write out a description of 2 differnt type of stepper motor drivers. I want to get a description of both types of drivers then a comparison between the two of them. I am examining the two types of drivers explained in this site

https://www.portescap.com/en/newsroom/blog/2023/06/an-overview-of-stepper-motor-drivers-and-their-types

GPT-5 mini:

Creating driver descriptions

I've fetched the Portescap article, so now I need to produce concise descriptions for the two driver types: L/R (constant voltage) and Chopper (constant current). I should also include a comparison table for clarity. Using Markdown headings is important, and I won't include any sources. Thankfully, there's no need to use today's date for this. Time to keep everything concise and organized in a way that's easy to read!## L/R (constant-voltage) driver

- Operation: supplies a fixed voltage to windings; current rise determined by motor L/R time constant. External series resistance or lower voltage limits current.

- Key components/behavior: simple switch/transistor bridge; no active current regulation.

- Advantages: low complexity and cost; simple circuitry; adequate at low speeds.

- Disadvantages: I^2R losses (heating) from added resistance; reduced torque at higher step rates because winding current cannot reach steady value; inefficient for high-speed/high-torque applications; limited performance envelope.

Chopper (constant-current) driver

- Operation: actively regulates winding current by switching the supply (current chopping). When current reaches set threshold, driver opens switch and allows current to decay, repeating at high frequency to hold a set RMS current.

- Key components/behavior: current-sense circuit, switching transistors (H-bridges or half-bridges), control logic/MCU or integrated driver IC; supports microstepping and dynamic current control.

- Advantages: maintains near-constant current → higher torque at speed, greater efficiency, lower heat in series resistors, better microstepping smoothness and noise reduction, supports higher speeds.

- Disadvantages: more complex and costly circuitry; requires careful layout and filtering to avoid electrical noise; needs current-sense and control components.

Comparison

Attribute	L/R (constant-voltage)	Chopper (constant-current)
Current control	Passive (determined by L/R and added resistance)	Active (regulated via chopping)
Torque at high speed	Drops significantly	Retained much better
Efficiency	Lower (I^2R losses)	Higher (reduced resistive losses)

| Complexity & cost | Low | Higher |

| Heat management | Higher dissipation in resistors | Better (heat mainly in motor/driver switching losses) |

| Noise & smoothness | Coarser stepping, more vibration | Smoother (microstepping, better current control) |

| Typical use cases | Simple, low-speed applications where cost matters | High-speed, high-torque, precision applications (CNC, robotics, medical) |

| Implementation today | Rare for demanding systems | Dominant; many integrated driver ICs available |

If you want, I can convert this into a one-page summary or a short slide-ready format.

Modifying Ender 3 Heat Bed

Prompt:

"I am trying to modify an ender 3 bed to heat to 170C"

Answer:

If your goal is ~170 °C on a 3D printer bed, you're already pushing beyond what typical consumer setups do (most are 60–120 °C). That means you need to think less like "printer upgrade" and more like industrial hotplate design.

Here's a breakdown of the actual heater technologies used, from common to more advanced—and what realistically gets you to 170 °C.

🔥 Core principle (all of these use the same physics)

Nearly all heated beds and hotplates rely on resistive (Joule) heating—passing current through a resistive material to generate heat

What differs is:

- **how the resistive element is packaged**
- **how heat is distributed**
- **how much power density you can safely achieve**

📦 Common 3D printer bed technologies

1. PCB trace heaters (cheap & common)

- **Copper traces etched into a fiberglass board**
- **Found in most entry-level printers**

Pros

- **Cheap, integrated, simple**
- **Decent uniformity at small sizes**

Cons

- **Low power density**
- **Slow heating**
- **Struggles above ~100–120 °C**

➡ Not suitable for 170 °C targets (you'll fight heat loss and board limits)

---

2. Silicone rubber heaters (industry standard upgrade)

- **NiCr wire or etched foil embedded in silicone**
- **Bonded to an aluminum plate**

Pros

- **High power density**
- **Very uniform heating**
- **Fast ramp times**
- **Can handle 200–250 °C continuous**

Cons

- **Requires proper mounting + insulation**
- **Often uses mains voltage for high power**

➡ This is the most common solution for high-temp beds

---

3. Kapton (polyimide) film heaters

- **Thin etched foil heater in polyimide film**

Pros

- **Very thin, lightweight**
- **Good for compact systems**

Cons

- **Lower durability than silicone**
- **Lower max power density**

➡️ **Can reach high temps, but less robust for large beds**

---

4. Aluminum plate + external heater (the real "hotplate" approach)

This is actually the key architecture:

- **Thick aluminum plate = heat spreader**
- **Heater (usually silicone) underneath**

Why it matters

- **Aluminum distributes heat evenly**
- **Prevents hotspots from the heater**

➡️ **This is how both 3D printer beds and lab hotplates are built**

⚡ **Less common / advanced heating methods**

5. Cartridge heaters (used in hotends, sometimes plates)

- **Cylindrical heaters inserted into drilled metal**

Pros

- **Very high temperatures (300 °C+)**

- **High power density**

Cons

- **Poor distribution unless many are used**
- **Requires machining**

➡ **Used in industrial hotplates, not typical beds**

---

6. Induction heating

- **Uses electromagnetic fields to heat conductive plates**

Pros

- **Very fast**
- **No embedded heater**

Cons

- **Complex electronics**
- **Requires specific materials**

➡ **Rare in 3D printing, more in industrial systems**

---

7. Ceramic / thick-film heaters

- **Resistive layer deposited on ceramic**

Pros

- **High temperature capability**
- **Very stable**

Cons

- **Expensive**
- **Brittle**

➡ **Used in lab/industrial hotplates**

🔥 What actually works for ~170 °C

To hit 170 °C reliably, you typically need:

✅ Recommended stack:

- **Silicone heater (high wattage, often AC mains)**
- **Thick aluminum plate (3–8 mm)**
- **Thermal insulation underneath**
- **Closed-loop PID control (thermistor/RTD)**

Why:

- **Silicone heaters can safely operate above your target temp**
- **Aluminum evens out heat**
- **High wattage overcomes convection losses**

⚠ Key engineering constraints (often overlooked)

1. Power density

- **Typical beds: ~0.2–0.4 W/cm²**
- **High-temp systems: 0.5–1.0+ W/cm²**

If you don't increase power, you'll never reach 170 °C.

---

2. Voltage choice

- **12V/24V → usually insufficient at large sizes**
- **120V/230V AC heaters → common for high-temp beds**

---

3. Heat loss dominates at high temp

At 170 °C:

- **Radiation + convection losses skyrocket**
- **Insulation becomes critical**

---

4. Surface materials matter

- **Glass beds struggle at high temps**
- **PEI, Garolite, or bare aluminum perform better**

🧠 **Practical takeaway**

If you're designing for 170 °C:

👉 **Skip PCB heaters entirely**
👉 **Use:**

- **Silicone heater (AC, high wattage)**
- **Aluminum tooling plate**
- **Good insulation + SSR control**

That combination is essentially how:

- **high-end 3D printers**
- **lab hotplates**
- **industrial heated platens**

are all built.

If you want, tell me your bed size and power supply constraints—I can help you calculate the exact wattage and heater spec you'd need.

Cited at [171, 172, 173].

Fill Out Columns of Motor Driver Comparison

Prompt:

"fill out drv8825 column"

Answer:

Here's the completed **DRV8825** column based on its typical characteristics:

- **Control board:** No
- **Required separate phase driving:** No
- **MOSFET bridge required:** No
- **Marlin support:** Yes
- **ABN encoding:** No

The DRV8825 is a fully integrated stepper motor driver (like A4988), so it doesn't need external MOSFET bridges or separate phase driving, and it's widely supported in Marlin firmware.

Conductive Ink To Use

Prompt:

"what conductive ink should i use and what nozzle with it to print traces on pcb subtrates"

Answer:

For printing **PCB traces with conductive ink**, your choice really depends on **how you're depositing it** (inkjet vs syringe vs dispenser) and how fine you want your traces. I'll break it down cleanly like you'd want for a project.

🧪 1. Best conductive ink types (what you should use)

🥇 Silver nanoparticle ink (BEST overall)

- Industry standard for printed electronics
- Very low resistance (closest to copper performance)
- Requires **sintering (heat ~80–150°C)** to become fully conductive

Good options:

- Voltera Conductor 3 Silver Ink → made specifically for PCB printing
- Sigma-Aldrich Conductive Silver Printing Ink → lab-grade, very consistent

👉 Use this if:

- You want **real PCB-quality traces**
- You're doing a serious project / competition

🥉 **Silver paste / syringe ink (easier prototyping)**

- Thicker, no fancy printer needed
- Can be dispensed manually or via syringe extruder
- Slightly higher resistance than nanoparticle inks

Good options:

- Chip Quik Conductive Paint Syringe
- Silver Conductive Glue Paste Syringe

👉 Use this if:

- You're using a **modified 3D printer or dispenser**
- You don't need ultra-fine traces

🥉 **Carbon / conductive paint (budget)**

- Much higher resistance
- OK for signals, NOT for power traces

Example:

- Bare Conductive Electric Paint

👉 Use this if:

- It's just a demo or low-current project

🧠 **Key takeaway (important)**

- **Silver ink = best conductivity**
- **Nanoparticle ink = best precision**

- **Paste = easiest to work with**

🔧 **2. Nozzle / tip size (this matters A LOT)**

Your nozzle depends on ink viscosity:

🖨️ **Inkjet-style (low viscosity ~10–20 mPa·s)**

- Nozzle size: **20–50 µm**
- Gives **VERY fine traces (~50–100 µm width)**
- Requires specialized printhead (not a normal 3D printer)

👉 Use if:

- You're doing **research-level / fine pitch PCB**

🧴 **Syringe / extrusion (most common for students)**

- Nozzle size:
  - **100–200 µm (0.1–0.2 mm)** → fine traces
  - **250–400 µm (0.25–0.4 mm)** → reliable, easier

👉 Best practical setup:

- 22–27 gauge needle
  - 22G ≈ 0.41 mm
  - 25G ≈ 0.25 mm
  - 27G ≈ 0.21 mm

✓ Recommended combo:

- **25G needle + silver paste**
- Good balance of **resolution + reliability**

📦 Important print settings

- Slow speed (5–20 mm/s)
- Low layer height
- Substrate: **FR4, Kapton, PET**
- Post-process:
  - Bake at **100–150°C** (if silver nanoparticle ink)
  - This step is CRITICAL for conductivity

⚡ What I'd recommend for YOUR project

Since you're doing an engineering project (and likely not using a $10k inkjet system):

✅ Best practical setup:

- Ink:
  → Voltera Conductor 3 Silver Ink (if you can afford it)
  OR
  → Chip Quik Conductive Paint Syringe
- Nozzle:
  → **25G (~0.25 mm)** needle
- Printer:
  → Modified 3D printer (syringe extruder)

⚠️ Common mistakes (avoid these)

- Using carbon ink for power → voltage drop issues
- Too small nozzle → clogging
- No sintering → traces won't conduct well
- Printing too fast → broken traces

If you want, I can:

- Recommend a **full printer setup (cheap vs pro)**
- Help you **tune settings for your exact printer**
- Or design **trace widths for your current project (DRV8825, motors, etc.)**

PCB General Camera Options

Prompt:

What is a preferable camera for creating a very high quality picture of a PCB? I intend on stitching together many images into a larger image. Also, I have a budget of 100 dollars for both the camera and lens

Answer:

To achieve a high-quality PCB image for stitching on a **$100 budget**, you generally have two paths: a used enthusiast-grade **DSLR** or a high-end **mobile macro lens** for your current smartphone.

Since you intend to **stitch images**, resolution and lens distortion are your biggest hurdles. A dedicated DSLR provides a larger sensor for better detail and "flatter" images that align more easily, while a mobile lens is more convenient and fits easily within your budget.

Recommended Camera Options

For a dedicated setup, you should look for older, used DSLR bodies that often sell for $30–$60, leaving room for a budget macro lens or extension tubes.

- Nikon D3200: This is your best bet for high resolution. Its **24.1-megapixel sensor** provides significantly more detail than other cameras in this price range, which is critical for seeing tiny PCB traces before you even begin stitching.
- Nikon D80: A very affordable entry point. While it has lower resolution (10.2MP), it features a **built-in focus motor**, allowing it to use older, cheaper vintage Nikon autofocus lenses.
- Canon Rebel XS: A solid budget alternative that often comes bundled with an 18-55mm lens. While not a true macro lens, the kit lens can get reasonably close for larger PCBs.

Nikon D3200 Dslr Camera with 18-55mm Lens

50USD

Nikon

4.7 (3k+)

Opens in a new window

Nikon D80 Digital Camera

29.99USD

Nikon

4.6 (323)

Opens in a new window

Smartphone Macro Lens Alternatives

If you already have a modern smartphone, spending your budget on a high-quality glass lens can often yield better results than a 15-year-old budget DSLR.

- Apexel 100mm Macro Lens: This lens offers a **100mm focal length**, which is ideal for PCBs because it allows you to stay a few inches away from the board. This makes it much easier to **provide consistent lighting** without the camera casting a shadow.

- Moment M-Series 10x Macro: Known for **edge-to-edge sharpness** and very low distortion. This is critical for stitching, as distorted edges make it impossible for software to align the images correctly.

- Ulanzi 75mm Macro Lens: A great middle-ground option that provides a **1.57–2.95 inch shooting distance**, giving you enough room to work while maintaining high clarity.

Apexel 100mm Macro Lens

$39.99

Apexel

4.6 (28)

Opens in a new window

M-Series 10x Macro Mobile Lens

$25.00

Moment

4.5 (833)

Opens in a new window

Ulanzi 75mm Macro Lens

$29.99

4.8 (213)

Opens in a new window

Expert Recommendation

I recommend the Nikon D3200 if you can find a used body and a cheap set of **macro extension tubes** (usually $15-$20). This combination will give you the highest raw resolution for stitching. If you prefer a simpler setup, the Moment 10x Macro for your phone will provide the best "flat" image for easy software alignment.

Since you are stitching images, would you like me to look for affordable **tripods or copy stands** to help keep your camera perfectly level during the process?

PCB Specific Camera Choices

Prompt:

“For a capture of a PCB's traces, is a microscope with a camera or a camera for macrophotography better?”

Answer:

Choosing the right tool for PCB (Printed Circuit Board) imaging depends entirely on whether you are trying to **map the board** or **diagnose a specific failure.**

It’s the classic battle between the "big picture" and the "nitty-gritty." Here is how they stack up for trace analysis.

Quick Comparison

Feature	Macro Photography (DSLR/Mirrorless)	Digital/Optical Microscope
Field of View	Large (can see the whole board)	Tiny (usually just a few components)
Depth of Field	Moderate (easier to keep everything in focus)	Very Shallow (requires "focus stacking")
Resolution	Very High (20MP–60MP+)	Lower (usually 2MP–12MP for digital)
Best For	Trace routing, documentation, reverse engineering	Inspecting solder joints, hairline cracks, vias
Lighting	Requires external setup (ring lights/flashes)	Usually built-in (often coaxial)

---

1. Macro Photography: The "Map Maker"

If your goal is to follow a trace from Point A to Point B across the board, a camera with a dedicated macro lens (typically 1:1 or 2:1 magnification) is your best bet.

- **Higher Clarity for Large Areas:** You can take one high-resolution shot and zoom in digitally to see several inches of traces at once.

- **Perspective:** It is much easier to keep your orientation. On a microscope, it's easy to get "lost" on a sea of green soldermask.
- **Lighting Control:** You can use polarized filters to cut the glare from the shiny soldermask, which is the "final boss" of PCB photography.

2. Microscope: The "Detective"

A microscope (especially a digital one or a trinocular stereo microscope with a C-mount camera) is designed for extreme magnification.

- **Extreme Detail:** If you suspect a **micro-crack** in a trace or a "whisker" short-circuit, a microscope will show you details a macro lens might struggle to resolve.
- **Vertical Inspection:** Most microscopes look straight down, which minimizes the distortion of the traces' edges.
- **The Downside:** The Field of View (FOV) is so small that "capturing the traces" usually requires taking dozens of photos and "stitching" them together, which is a massive headache.

The Verdict

- **Choose a Macro Camera if:** You are reverse-engineering a circuit, documenting a build, or need to see how traces interact across a large area. A 100mm macro lens is the industry gold standard here.
- **Choose a Microscope if:** You are doing "surgical" work—repairing a broken trace with a jumper wire, checking for manufacturing defects in 0201-sized components, or inspecting the inside of a via.

A Pro-Tip on Lighting: Regardless of which you choose, **diffusion is everything.** PCB traces are reflective; if you use a direct flash or a single bright LED, you'll just get a "hot spot" of white light and see nothing else. Use a "light tent" or a piece of white paper to soften the light.

Would you like me to recommend a specific lens or microscope setup based on your budget?

Appendix F – Miscellany